Discover®
Innovative Battery Solutions

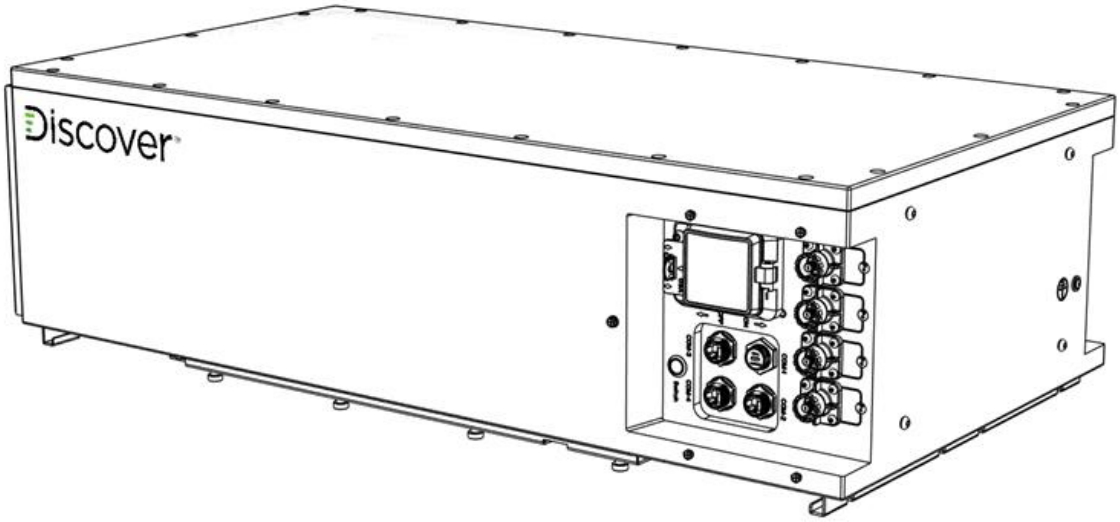

DLM-16000-48 Lithium Mobile Installation and Operation Manual

REV A

1 Contents

1 GUIDE FOR UL9540-COMPLIANT INSTALLATION 6

2 AUDIENCE, SAFETY, MESSAGES, AND WARNINGS 9

2.1 Audience 9

2.2 Warning, Caution, Notice, and Note Messages 9

2.3 General Warnings 10

2.4 Safe Handling Procedures 11

2.5 Personal Protective Equipment 11

3 INTRODUCTION 11

4 ITEMS SHIPPED IN THE BOX 12

5 SPECIFICATIONS 13

5.1 Electrical Specifications 13

5.2 Mechanical Specifications 15

5.3 Environmental Specifications 17

5.4 Protection Specifications 18

5.4.1 Breaker Delay Specifications 20

5.5 Internal Heating Specifications 21

5.6 Minimum Specifications for Battery Systems 22

5.7 Regulatory 23

6 TRANSPORTATION 23

7 HANDLING 23

8 FEATURES 24

8.1 Battery Features 24

8.2 Battery Breaker 25

8.3 Battery ON/OFF Key 26

8.4 COM 2 (CAN Port) 27

8.4.1 COM2 Port RJ45 Pin Assignment 27

8.5 COM 3/COM 4 (LYNK Port) 28

8.5.1 LYNK Port Communication RJ45 Pin Assignment 28

9 THEORY OF OPERATION 29

9.1 Ingress Protection (IP65) 29

9.2 Internal Heating 30

9.3 Battery Management System 30

9.3.1 Battery Management System Protections 30

9.3.2 BMS Pre-Charge System 31

9.3.3 Battery Management System Load Qualification 31

9.3.4 Battery Management System Cell Balancing 31

9.3.5 Battery Charge and Discharge Settings 31

9.4 LYNK Network Communication 32

9.4.1 LYNK Network Power 32

9.4.2 LYNK Network Size 32

9.4.3 LYNK Network Cables 32

9.4.4 LYNK Network Termination 32

9.5 Updating Battery Firmware 33

9.5.1 Update Lithium Mobile Firmware With LYNK ACCESS 33

10 OPTIONAL ACCESSORIES 34

11 INSTALLATION 36

11.1 Tools 36

11.2 Location 36

11.3 Attaching the Battery onto a Wall 38

11.4 Wiring 42

11.4.1DC Cables 42

11.4.2DC Protection 42

11.4.3Terminal Connections and Hardware 43

11.5 Battery Installation 44

11.5.1Single Battery Installation Procedure 45

11.5.2Multiple Battery Installation Procedure (Parallel Wiring Kit) 47

11.5.3More Than Three Battery Installation Procedure (Busbar) 52
11.6 Grounding 55
11.6.1Grounding the Batteries 55
11.7 Closed-Loop Communication 56
11.7.1LYNK Network 57
11.7.2Setting Up Closed-Loop Communication with the LYNK II Gateway 58
11.7.3Setting Up Closed-Loop Communication Without the LYNK II Gateway 59
12 OPERATION 60
12.1 Charging 61
12.1.1Closed-Loop Charging 61
12.1.2Configure Closed-Loop Charge Settings (LV-BMS) 62
12.2 When to Charge the Battery 65
12.3 Charging Profile 66
12.3.1Bulk Charge 66
12.3.2Absorption Charge 67
12.3.3Equalization Charge 67
12.3.4Float Charge 67
13 ROUTINE INSPECTION 68
14 STORAGE 68
15 BATTERY FIRMWARE AND DATA LOGS 69
16 TROUBLESHOOTING 69
17 RELATED INFORMATION 70
18 GLOSSARY OF TERMS, ABBREVIATIONS, AND ACRONYMS 70
19 APPENDIX 70
19.1 Lithium Mobile Commissioning Checklist 71
19.2 Battery Startup Procedure 72
19.3 Lithium Mobile Decommissioning Checklist 73
19.4 Lithium Mobile Closed-Loop Communication - Supported Inverters 74
19.4.1Cables for Closed-Loop Communication Without LYNK II 75

19.5 How to Calculate Minimum Battery Sizing 78
19.5.1Calculating the recommended number of batteries per inverter 79
19.5.2Calculating Inverter Peak Current 80
19.6 Sol-Ark Inverter Configuration (Closed Loop Without LYNK II) 80
19.6.1Sol-Ark Inverter Configuration (Open Loop) 88
19.7 Solis Inverter Configuration (Closed Loop Without LYNK II) 93
19.7.1Solis Inverter Configuration (Open Loop) 97
19.8 Victron Inverter Configuration (Closed Loop Without LYNK II) 98
19.8.1Victron Inverter Configuration (Open Loop) 103

1 GUIDE FOR UL9540-COMPLIANT INSTALLATION

Lithium Mobile	Description
Battery model number	DLM-16000-48
Maximum capacity per unit	16 kWh
Minimum separation from other ESS (sides)	25.4 mm (1.0 in)
Minimum separation from other ESS (front to back)	25.4 mm (1.0 in)
Minimum separation from other ESS (above/below)	Not applicable (1)
Minimum separation from combustible build constructions and other structures	25.4 mm (1.0 in)
Exterior wall minimum separation from other ESS (side to side)	25.4 mm (1.0 in)
Exterior wall minimum separation from other ESS (above/below)	Not applicable (1)
Exterior wall minimum separation from other openings	91.4 cm (36 in)
UL 9540 Edition	UL 9540:2023 (3rd Edition DC Energy Storage System) Report CN2549VH 001 The UL9540 certification applies when paired with any UL1741-listed inverter.

Lithium Mobile	Description
UL9540A Testing Organization, Report, Date	Report CN248DTM 001, UL 9540A:2019 (Fourth Edition)
Additional fire suppression required	None
Additional explosion protection	Minimum compliant room size is 32.5 m^3 (1,148 ft^3) (2) (3)
Suitable locations	Light tower, security cameras, mobile construction trailers, mobile power units, recreational vehicles.
Limited access requirements	None
Environmental restrictions	Not suitable in locations exposed to salt spray, humid marine environments, or condensation.
Emergency Service Contact information	Infotrac: 1-800-535-5053 (Account # 115375)
DC ESS	The electrical ratings of connected power conversion equipment shall be compatible with Electrical Specifications.

(1) There is no limitation to installing a Lithium Mobile battery above or below other Lithium Mobile.

(2) The room volume protects against explosion in the unlikely event of a battery releasing explosive gases and entering thermal runaway. In normal operation, $LiFePO_4$ batteries do not release any hazardous gas. If the room has a 9 ft ceiling, 1,148 ft^3 equates to a minimum room size of 10 x 13 ft.

(3) If the room is smaller than prescribed, adding vents, deflagration vents, or a constantly running air circulation system could reduce the required room size. A certified safety engineer should determine the venting and volume of air circulation required.

2 AUDIENCE, SAFETY, MESSAGES, AND WARNINGS

- Audience
- Warning, Caution, Notice, and Note Messages
- General Warnings
- Personal Protective Equipment
- Safe Handling Procedures

2.1 Audience

Configuration, installations, service, and operating tasks should only be performed by qualified personnel in consultation with local authorities having jurisdiction and authorized dealers. Qualified personnel should have training, knowledge, and experience in the:

- Installation and commissioning of electrical equipment.
- Application of electrical codes, safety, and installation standards.
- Analysis and reduction of hazards involved in performing electrical work.
- Installation, configuration, and maintenance of batteries and energy storage systems.
- Installation and configuration of communication systems, such as CAN and Ethernet.
- Installation and configuration of systems activated by relays.

2.2 Warning, Caution, Notice, and Note Messages

Messages in this manual are formatted according to this structure.

	Additional information concerning important procedures and features of the product. Read all the instructions before installation, operation, and maintenance.
	Important information regarding hazardous conditions.

⚠ WARNING
Important information regarding hazardous conditions that may result in personal injury or death.

⚠ CAUTION

Important information regarding hazardous conditions that may result in personal injury.

NOTICE

Important information regarding conditions that may result in damage to the equipment but not personal injury.

NOTE

Ad hoc information concerning important procedures and features of the battery not related to personal injury or equipment damage.

2.3 General Warnings

⚠ WARNING

ELECTRIC SHOCK AND FIRE HAZARD

This equipment must only be installed as specified. Do not disassemble or modify the battery.

If the battery case has been damaged, do not touch exposed contents. There are no user-serviceable parts inside.

Failure to follow these instructions may result in death or serious injury.

⚠ WARNING

ELECTRIC SHOCK AND FIRE HAZARD

Do not lay tools or other metal parts on top of the battery or across the terminals.

Failure to follow these instructions may result in death or serious injury.

⚠ CAUTION

ELECTRIC SHOCK

Do not touch the energized surfaces of any electrical component in the battery system. Before servicing the battery, follow all procedures to fully de-energize the battery system. Follow the “Safe Handling Procedures” below when working with the battery.

Failure to follow these instructions may result in injury.

2.4 Safe Handling Procedures

Before using the battery and any power electronics, read all instructions and cautionary markings on all components and appropriate sections of their manuals.

- Use personal protective equipment when working with batteries.
- Do not dispose of the battery in fire.
- Promptly dispose or recycle used batteries following local regulations.
- Do not disassemble, open, crush, bend, deform, puncture or shred.
- Do not modify, re-manufacture, attempt to insert foreign objects into the battery, immerse or expose to water or other liquids, or expose to fire explosion or other hazards. If the user suspects damage to the battery due to water, heat, or other reason, take it to a service center for inspection.
- Only use the battery for the system for which it is specified.
- Do not lift or carry the battery while in operation.
- When lifting a heavy battery, follow the appropriate standards.
- Only lift, move, or mount following local regulations.
- Take care when handling battery terminals and cabling.
- Only use the battery with a charging system that has been qualified for the system. The use of an unqualified battery or charger may present a risk of fire, explosion, leakage, or other hazards.
- Do not short circuit a battery or allow metallic conductive objects to contact battery terminals.
- Replace the battery only with another battery that has been qualified for the system. Using an unqualified battery may present a risk of fire, explosion, leakage, or other hazards.
- Avoid dropping the device or battery. If the device or battery is dropped, especially on a hard surface, and the user suspects damage, take it to a service center for inspection.

2.5 Personal Protective Equipment

When handling or working near a battery:

- Use Personal Protective Equipment, including clothing, glasses, insulated gloves, and boots.
-
- Do not wear rings, watches, bracelets, or necklaces.

3 INTRODUCTION

The Lithium Mobile, a rechargeable Li-ion battery from Discover Battery (Discover), is a high-capacity, low-voltage battery that can operate independently or in a battery bank configuration where multiple batteries are connected in parallel.

This document applies to Lithium Mobile batteries with serial numbers DLPHD48B251790001 and later. For Lithium Mobile batteries with earlier serial numbers, please refer to Rev C.

The vertical mount bracket was updated. For information on the earlier vertical mount bracket for Lithium Mobile batteries with serial numbers before DLPHD48B250780001, refer to the installation instructions in Rev C.

The following are easy ways to identify which revision of the manual you should use.

4 ITEMS SHIPPED IN THE BOX

Items	Description
1	Battery
1	Lithium Mobile Installation and Operation Manual
1	CAT6 cable (1.5 m, 59 inch)
1	Vertical mount bracket
2	Rope handle
1	Terminator

5 SPECIFICATIONS

All specifications in this document are published @25°C / 77°F.

- Electrical Specifications
- Mechanical Specifications
- Environmental Specifications
- Protection Specifications
- Internal Heating Specifications
- Minimum Specifications for Battery Systems
- Regulatory

5.1 Electrical Specifications

Lithium Mobile Electrical Specifications

Electrical Specification	DLM-16000-48
Nominal Voltage	51.2 V
Recommended Voltage Range	48 - 55.2 V
Energy	16,080 Wh
Nominal Capacity	314 Ah
Charge Bulk Voltage - Bulk Vdc	55.2 – 56.8 V
Charge Absorption Voltage - U1 MAX	55.2 – 56.8 V
Charge Float Voltage - U2	53.6 V
Charge Termination Current [(a)]	5 A

Electrical Specification	DLM-16000-48
Low Voltage Disconnect Recommended	48.0 V
Low Voltage Disconnect [b]	43.2 V
Max Continuous Charge Current [c]	200 A
Max Continuous Discharge Current [c]	200 A
Peak Discharge Current (15 seconds)	300 A RMS
Self Discharge Current (operation)	≤ 25 mA
Self Discharge Current (battery OFF)	≤ 4 mA
Breaker	200 A breaker (CVP-RH-P2BD5-D200-LT)
Maximum short circuit fault current (IBF / ½ IBF)	7.16 kA (100 ms) / 3.58 kA (100 ms)
Arc Flash Incident Energy IEm	0.310 Cal/cm^2
Arc Flash Incident Energy AFB	239 mm (9.41 in)

Charge termination current is permitted to be less than specified.

(a) Low Voltage Disconnect is performed by the BMS based on 2.7 VPC under load. In no load conditions, do not allow the battery to self-discharge below 3.0 VPC.

(b) The max continuous charge and discharge currents are the ratings for a full charge and discharge cycle with no rest and without tripping over-temperature protection at 25°C (77°F) ambient.

•

NOTE
Reduce the charge termination current to increase the time available for the internal balancing function.

5.2 Mechanical Specifications

Lithium Mobile Mechanical Specifications

Mechanical Specification	DLM-16000-48
Chemistry	$LiFePO_4$
Height (body only)	247 mm (9.72 in)
Width	465 mm (18.31 in)
Length	900 mm (35.43 in)
Terminal	Quick Connect Plug-and-Pull Terminal
Weight	136 kg (299.83 lb)
Shipping Weight (includes vertical mount, cables, bolts, and rope handles)	150 kg (330.7 lb)
IP Rating	IP65

Mechanical Specification	DLM-16000-48
Case Material	Galvanized Steel Sheet
Color	Pantone Gray 3C

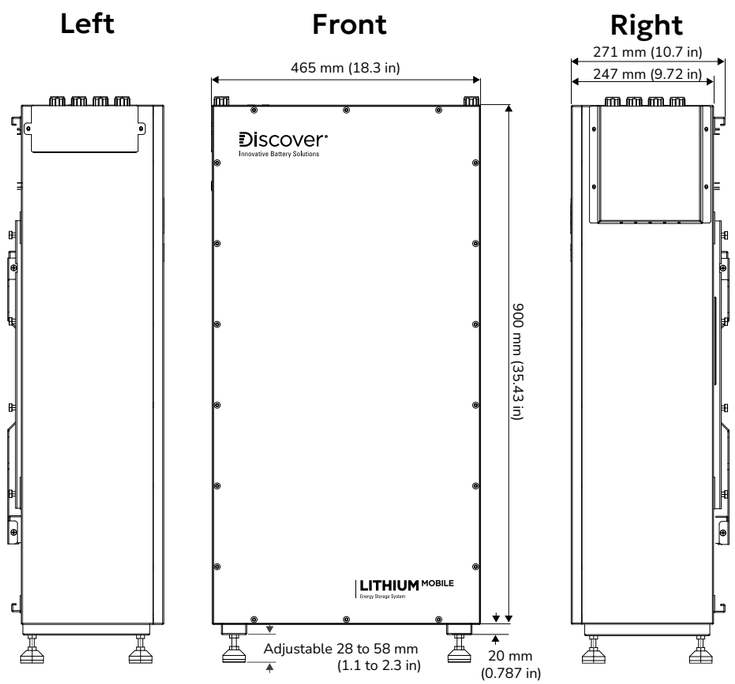

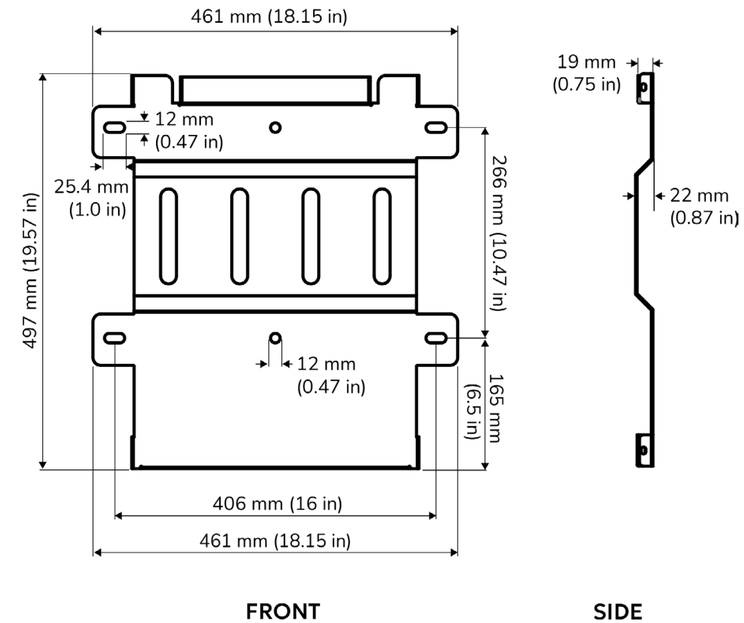

Lithium Mobile Vertical mount Bracket Specifications

Specification	Vertical mount Bracket
Height	497 mm (19.57 in)
Width	461 mm (18.15 in)

Specification	Vertical mount Bracket
Depth	22 mm (0.87 in)
Weight	3.8 kg (8.4 lb)
Material	Galvanized Steel Sheet

5.3 Environmental Specifications

Lithium Mobile Environmental Specifications

Specification	DLM-16000-48
Rated Altitude [a]	Altitude of up to 2,000 m (6,561 ft) does not affect operating characteristics
Relative Humidity	5 to 95% (Non-condensing)
Charge Operating Temperature Range [b][c]	4°C to 55°C (39.2°F to 131°F)
Discharge Operating Temperature Range [b]	-25°C to 55°C (-13°F to 131°F)
Internal Heater Operating Temperature Range [d]	-25°C to 8°C (-13°F to 46.4°F)
Storage Temperature (1 month) [e]	-20°C to 55°C (-4°F to 131°F)
Storage Temperature (6 months) [e]	-10°C to 30°C (14°F to 86°F)

Consider reducing charge parameters on power conversion equipment at higher altitudes.

(a) Specifies the temperature of the cells and not the ambient temperature. Ambient temperature and cell temperature may not be the same.

(b) Although the Battery Management System (BMS) does not allow charging when cells are below 4°C (39.2°F), the battery has a heater that warms the battery to a temperature that enables charging to resume at 4°C (39.2°F).

(c) When the Lithium Mobile battery cells are between -25°C (-13°F) and 5°C (41°F) and either connected to a charging source or the battery SOC is 50% or more, energy is diverted to the internal heater until the battery reaches 8°C (46.4°F).

(d) Storage outside of specified temperatures will result in permanent capacity loss and void the warranty.

•

5.4 Protection Specifications

Lithium Mobile Protection Specifications

Specification	DLM-16000-48
Overvoltage	
Protection [(a)]	Above 58.08 V for 3 seconds
Recovery [(a)]	Recovery after 120 seconds and less than 55.2 V
Undervoltage	
Protection [(b)]	Less than 43.2 V for 5 seconds
Recovery [(b)]	No automatic recovery. The battery shuts down after 120 seconds.
Over-Charge Current	
Protection	Greater than 200 A for 10 seconds
Recovery	Remove source. Recovery after 120 seconds
Over-Discharge Current	
Protection [(c)]	Greater than 200 A for 15 seconds
Recovery [(c)]	Remove load. Recovery after 120 seconds

Specification	DLM-16000-48
Over-temperature in Charge	
Protection [(d)]	Cell temperature above 55°C (131°F) for 5 seconds
Recovery [(d)]	Cell temperature below 51°C (123.8°F)
Under-temperature in Charge	
Protection [(d)]	Cell temperature below 4°C (39.2°F) for 5 seconds and charge current detected.
Recovery [(d)]	Recovery after 120 seconds and cell temperature 4°C (39.2°F) or higher. Note: Discharge is available to -25°C (-13°F).
Over-temperature in Discharge	
Protection [(d)]	Cell temperature above 55°C (131°F) for 5 seconds
Recovery [(d)]	Cell temperature below 51°C (123.8°F)
Under-temperature in Discharge	
Protection [(d)]	Cell temperature below -25°C (-13°F) for 5 seconds
Recovery [(d)]	Cell temperature above -23°C (-9.4°F)
Load Qualification Protection	
Protection	Mixed System Voltage, Short Circuit, Reverse Polarity, Input Capacitance Overload

Specification	DLM-16000-48
Recovery	Re-qualify after 120 seconds. After ten failed attempts to qualify, the battery switches OFF.

Overvoltage protection monitors individual cell voltages. Protection is triggered when any cell is over 3.63 VPC and recovers when all cells are below 3.45 VPC for 120 seconds. Voltages are provided for guidance only.

(a) Undervoltage protection monitors the voltage of individual cells. Protection is triggered, and the battery is set to OFF when any cell is at or below 2.7 VPC. Manually set the battery ON to recover. Voltages are provided for guidance only.

(b) For time versus current interrupt details, refer to the figure below.

(c) Specifies the temperature of the cells and not the ambient temperature. Ambient temperature and cell temperature may not be the same.

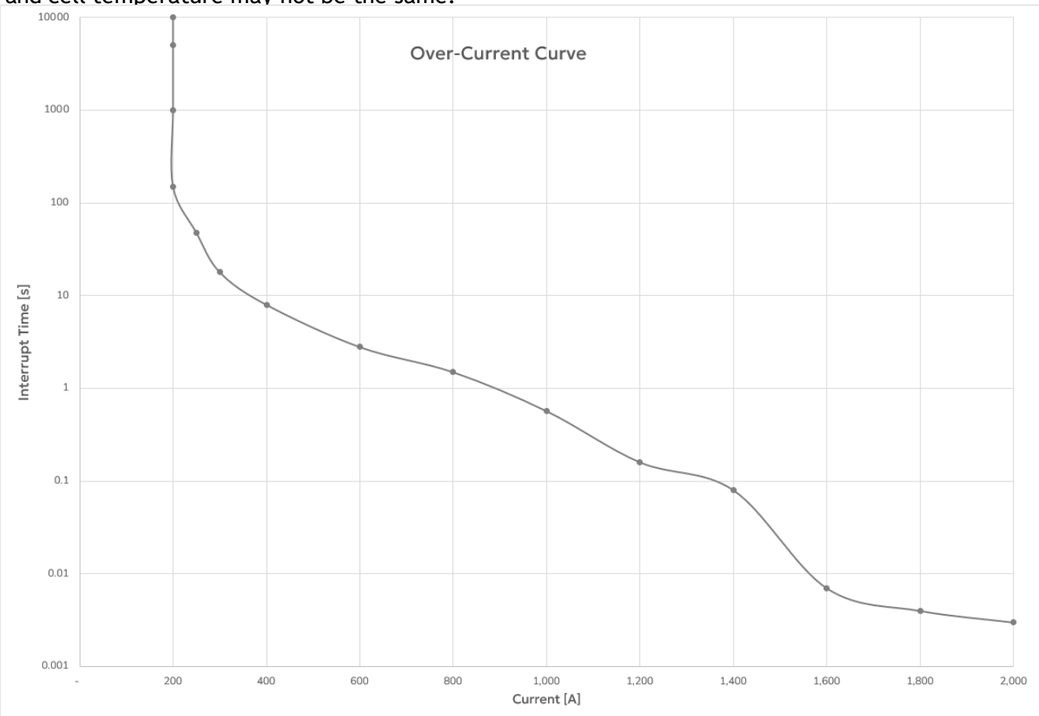

5.4.1 Breaker Delay Specifications

Breaker Delay

Rating (%)	Current	Delay Time (seconds) [a]
100	200 A	Breaker should not trip
100 - 125	200 - 250 A	Breaker may trip
150	300 A	18
200	400 A	8
300	600 A	2.8
500	1000 A	0.57
800	1600 A	0.007

(a) The delay time is approximate due to the breaker tolerance range.

5.5 Internal Heating Specifications

Internal heating is available on all Lithium Mobile (DLM-16000-48) batteries.

Lithium Mobile Internal Heating Specifications

Specification	DLM-16000-48
Heating Power	250 W
Heating On [a]	Below 5°C (41°F), and Either charge detected or SOC is 50% or more

Specification	DLM-16000-48
Heating Off [a]	Temperature above 8°C (46.4°F), or No charge current detected and SOC is less than 50%

(a) Specifies the temperature of the cells, not the ambient temperature. Ambient temperature and cell temperature may not be the same.

5.6 Minimum Specifications for Battery Systems

Install Lithium Mobile batteries in parallel in a battery bank configuration to increase system capacity. Overall battery system capacity must be correctly sized to meet the requirements of the load and account for:

- Total Max Continuous Charge Current
- Total Peak Current
- Total Max Continuous Discharge Current

The total charging capacity of all charging sources in the system should not exceed the Max Continuous Charge Current operating limit of all the batteries in the system. The same is true for discharge. The total discharging capacity of all loads in the system should not exceed the Max Continuous Discharge Current operating limit of all the batteries in the system.

If the Max Continuous Charge Current or Max Continuous Discharge Current is exceeded for any battery in the system, the BMS in that battery will trigger the over-current protection and disconnect. The charging system's maximum charge current must be below the operating limit of installed batteries or be curtailed.

The sum of all the Peak Current values for the attached loads must be less than the Peak Current of the battery system, including inrush current values, for any motors and surge values for any inverters.

For Lithium Mobile batteries installed in parallel in a battery bank configuration, the sum of all battery capacities provides the overall capacity value for the battery system. The table below, "Lithium Mobile DC Capacity Values for Sample Battery Systems," provides DC capacity values for sample Discover systems.

NOTICE
VOLTAGE SPIKE Exceeding the Max Continuous Current of all the batteries in the system will trigger the battery BMS over-temperature protection quicker, resulting in the disconnection of all batteries in the system. Disconnection will result in a voltage spike (Load Dump), which may damage components electrically attached to the battery system. **Failure to follow these instructions may result in equipment damage.**

NOTE
The maximum number of batteries that can be installed in a closed-loop configuration with a LYNK II Gateway device is 36.

Lithium Mobile DC Capacity Values for Sample Battery Systems (@25°C, 77°F) [a]

Parallel System	Max Continuous Discharge Current	Max Continuous Charge Current	Max Input / Output Power	Usable Capacity
1 battery	200 A	200 A	10.24 kW	16 kWh
2 batteries	380 A	380 A	20.48 kW	32 kWh
3 batteries	400 A	400 A	20.48 kW	48 kWh

(a) The above table specifies the upper performance values in a 1 battery, 2 battery, and 3 battery system when connected in parallel. To achieve these performance numbers, all the components in your system, including cables and inverters, must be sized appropriately.

5.7 Regulatory

Regulatory
UN38.3 Transportation
UL 1973
UL 9540A
UL 9540 DC ESS 3rd Edition

6 TRANSPORTATION

Transport it in the original package or equivalent if the battery is not installed in equipment. Per the UN Handbook of Tests and Criteria, batteries are tested to part III, subsection 38.3 (ST/SG/AC.10/11/Rev. 5). For transportation, the batteries belong to category UN3480, Class 9.

7 HANDLING

Before handling:

- Keep the battery away from sparks and flames
- Disconnect the cables from the battery
- Protect battery terminals from short-circuiting and touch
- Do not lift or carry the battery while it is in use or in operation
- Do not lift the battery by attached battery cables
- Set the battery breaker in the OFF (Open) position

8 FEATURES

- Battery Features
- Battery Breaker
- Battery ON/OFF Key
- COM2 (CAN Port)
- COM3/COM4 (LYNK Port)

8.1 Battery Features

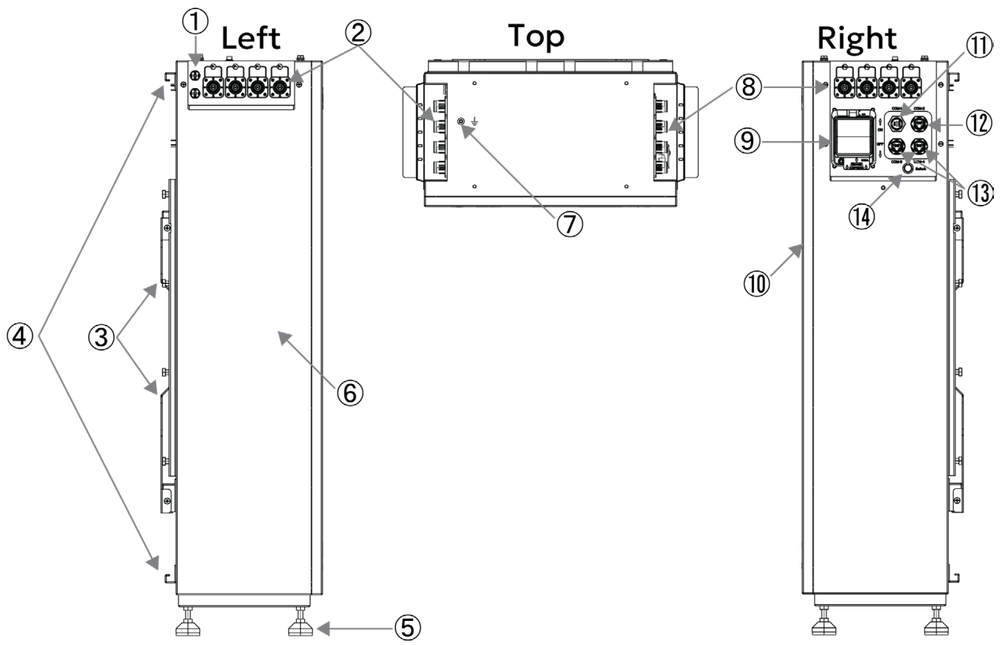

Item	Description
1	Breather valves
2	4 x Battery negative terminals (-) black (with quick connects)
3	Vertical mount bracket
4	Brackets for lifting with rope handles

5	Adjustable feet
6	Battery casing
7	Grounding screw
8	4 x Battery positive terminals (+) orange (with quick connects)
9	Single-Pole (positive only) 200 A breaker
10	Front casing cover
11	USB Type-C port for diagnostics and technical support
12	COM2: CAN port for closed-loop communication with supported inverters. For information about the COM2 port and which inverters support direct communication, see <link>Lithium Mobile Closed-Loop Communication - Supported Inverters.
13	COM3, COM4: 2 x LYNK ports for communicating battery information
14	ON/OFF key

8.2 Battery Breaker

The battery breaker protects the electronic components of the battery's internal BMS from high, externally generated currents.

NOTICE
BREAKER AND BMS HAZARD The breaker and the BMS are independent. Setting the breaker to the ON (Closed) position does not switch the BMS ON. Setting the breaker to the OFF (Open) position does not switch the BMS OFF. Independently set the BMS ON or OFF with the ON/OFF key. **Failure to follow these instructions may result in equipment damage.**

NOTE

Additional external DC fusing or breakers may be required to protect the battery cables from DC overcurrent and to meet installation codes.

8.3 Battery ON/OFF Key

1. To turn ON the battery, first switch the breaker to the ON (closed) position.
2. Briefly press the battery's ON/OFF key to switch the battery ON. The LED lights up orange.
3. To turn OFF the battery, briefly press the ON/OFF key. The LED turns OFF.
4. If desired, switch the breaker to the OFF (open) position.

NOTICE

BREAKER AND BMS HAZARD

The breaker and the BMS are independent. Setting the breaker to the ON (Closed) position does not switch the BMS ON. Setting the breaker to the OFF (Open) position does not switch the BMS OFF. Independently set the BMS ON or OFF with the ON/OFF key.

Failure to follow these instructions may result in equipment damage.

Battery ON/OFF Key LED States

LED	Description
Off	Battery is OFF.
On	Battery is ON.
Pulse	Battery is warning of an approaching protection limit.
Flash	Either the battery breaker is open or the battery has faulted. Use LYNK Access software to identify and diagnose the issue.
Double-flash	Battery is identifying itself after the **Identify** command was issued from LYNK Access software.

8.4 COM 2 (CAN Port)

The COM2 port on the Lithium Mobile enables closed-loop communication without using the LYNK II Gateway with some brands of inverters (see the table in the Lithium Mobile Closed-Loop Communication - Supported Inverters topic). Using the LYNK II Communication Gateway enables communication with all supported inverter brands. The LYNK II Gateway also enables using LYNK ACCESS software for battery diagnostics and connects to LYNK CLOUD for remote battery monitoring.

8.4.1 COM2 Port RJ45 Pin Assignment

	Pin Number	Function
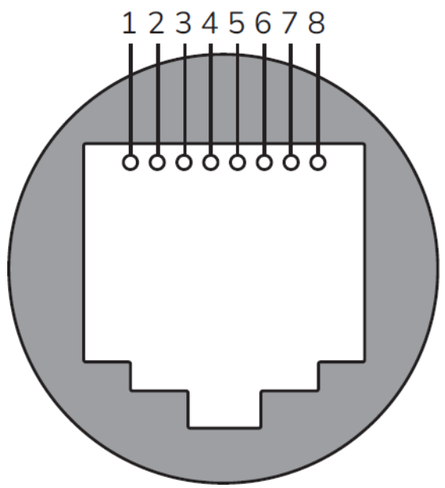	1	(Do not use)
	2	(Do not use)
	3	(Do not use)
	4	CAN High
	5	CAN Low
	6	CAN Ground
	7	(Do not use)
	8	(Do not use)

8.5 COM 3/COM 4 (LYNK Port)

The COM3 and COM4 ports (LYNK ports) enable multiple Discover batteries to communicate and interact in a closed-loop network. The LYNK ports also enable the Lithium Mobile batteries to work together in a closed-loop communication system with other networked devices, such as inverter-chargers. A closed-loop system enables safety and optimizes system performance.

8.5.1 LYNK Port Communication RJ45 Pin Assignment

	Pin Number	Function
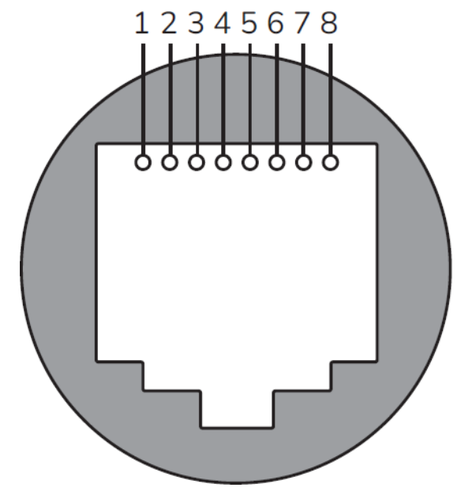	1 (1)	Reserved. Do not use.
	2 (1)	Reserved. Do not use.
	3 (1)	Reserved. Do not use.
	4	CAN High
	5	CAN Low
	6 (1)	Reserved. Do not use.
	7	CAN Ground
	8	CAN Ground

(1) Do not populate. Do not terminate to power. Do not terminate to ground. Do not terminate to CAN_L or CAN_H. Unless instructed by Discover Battery.

9 THEORY OF OPERATION

- Ingress Protection (IP65)
- Internal Heating
- Battery Management System
- LYNK Network Communication
- Updating Battery Firmware

9.1 Ingress Protection (IP65)

Ingress protection rates the degree of protection provided by mechanical casings and electrical enclosures against intrusion, dust, accidental contact, and water under specified conditions.

The IP65 rating indicates that the product is protected against:

- Dust
- Accidental contact, such as from fingers or tools
- Water, such as low-pressure water jets, condensation, and water spray.

NOTE
The battery is not protected against high pressure water jets or submersion in water.

IP codes guide suitability for use under different environmental conditions. IP ratings do not indicate fitness for purpose or confer a performance guarantee.

9.2 Internal Heating

The Lithium Mobile battery is equipped with internal heating. When the battery's internal temperature is below 5°C (41°F) and the battery is either connected to a charging source or SOC is 50% or more, energy is diverted to the internal heater to avoid the under-temperature fault.

The heating stops when:

1. The battery's internal temperature reaches 8°C (46.4°F).
   - Once the cell temperature reaches this threshold, all the energy is directed to charging the cells.
2. No charge current is detected and SOC is less than 50%.
   - After the heating stops, if the battery's internal temperature drops below 5°C (41°F) and the battery is connected to a charging source, the heater turns ON again.

For information about internal heating, refer to Protection Specifications and Internal Heating Specifications.

NOTE
Charging and heating can occur simultaneously. However, the BMS will not allow charging to continue when cell temperature drops below 4°C (39.2°F) for 5 seconds.

9.3 Battery Management System

9.3.1 Battery Management System Protections

The Battery Management System's (BMS) primary function is to monitor cell module voltage, temperature, and battery current. The BMS uses this information to maintain cell operation within operating specifications. If a parameter falls outside of operating specifications, the BMS will disconnect and protect the battery from:

1. Overvoltage: Charge voltages that are too high.
2. Undervoltage: Discharged voltage that is too low.
3. Overcurrent: Current is too high when powering up a load (high inrush current) or from a sustained charging or discharging current above the specified limit.
4. Over-temperature: Cell temperature that is too high during charge and discharge.
5. Under-temperature: Cell temperature that is too low during charge and discharge.
6. Load Qualification: Protection may occur when switching the battery ON. The protection qualifies the load attached to it to prevent switching ON into a reverse polarity, short circuit, mixed voltage system, or large capacitive load.

For trigger and recovery values, refer to the table in the Protection Specifications topic.

The BMS reconnects when it hits recovery thresholds. Manually switch the battery ON if the BMS disconnects due to low voltage protection. If a low-voltage fault is constantly affecting the system, there may be a constant parasitic draw. To prevent the low-voltage fault when the battery is not in use, a physical disconnect switch is recommended.

After a load qualification fault, there is a 120-second delay until you can switch ON the battery again.

NOTE
Charge and discharge have different operating temperature limits. If the BMS disconnects in response to temperature or current limits, the battery automatically restarts only after 120 seconds elapse and the temperature or current reaches normal operating limits.

9.3.2 BMS Pre-Charge System

Turn on all batteries in the battery bank before energizing any inverter-chargers to prevent tripping a breaker in the battery bank while pre-charging the system.

The battery has a Pre-Charge System to energize external capacitive loads before switching the main relay ON. The maximum input capacitance for a single battery should not exceed the values in the table in the Electrical Specifications topic.

NOTICE
BATTERY FAULT Charge and discharge have different operating temperature limits. If the BMS disconnects in response to temperature or current limits, the battery automatically restarts only after 120 seconds elapse and the temperature or current reaches normal operating limits. **Failure to follow these instructions may result in equipment damage.**

9.3.3 Battery Management System Load Qualification

When the battery switches from the OFF state to the ON state, the battery BMS will qualify the external load before switching ON the main relay. Load qualification will reject switching ON into short circuit, reverse polarity, mixed voltage systems, or capacitive loads that exceed the battery's limits.

The battery will attempt Load Qualification up to 10 times. After ten failed attempts at Load Qualification, the battery switches OFF.

During Load Qualification, or when a load is disqualified, the ON/OFF key flashes.

9.3.4 Battery Management System Cell Balancing

The cell balancing circuits in the battery compare all cells in a battery and balance the cell voltage at the end of the charge. When there is a network of batteries over the LYNK port, all battery cells are balanced as an entire system, not as individual batteries.

9.3.5 Battery Charge and Discharge Settings

The Lithium Mobile supports direct closed-loop communication with some brands of power conversion devices. Other types of inverters, such as Schneider XW+ and XW Pro with Xanbus, require a LYNK Communication Gateway. In addition to communication, the LYNK II provides other benefits such as monitoring, diagnostics, programmable relays, and LYNK CLOUD. For further information, please refer to the LYNK II Gateway Communication User Manual available from the discoverbattery.com website, or contact your Discover provider for assistance.

Refer to the appropriate LYNK II Communication Gateway Application Note available from discoverbattery.com for the set up of closed-loop parameters and integration with specific brands of solar inverter-chargers and solar charger controllers.

9.4 LYNK Network Communication

Discover batteries use CAN communication over the LYNK Network to coordinate performance with other batteries and communicate with accessories such as the LYNK II Communication Gateway.

9.4.1 LYNK Network Power

A Discover battery provides the LYNK network power through the LYNK port (COM3/COM4 on the Lithium Mobile). Discover documentation specifies how many batteries are required to provide sufficient power for the LYNK network and compatible accessories. Some accessories may require more than one battery to provide sufficient power.

NOTICE
EQUIPMENT DAMAGE Do not use an external power source to power devices over the LYNK Network. **Failure to follow these instructions may result in equipment damage.**

NOTE
The LYNK II Communication Gateway is required for diagnosing the batteries and using the LYNK Cloud web service.

9.4.2 LYNK Network Size

One LYNK Network can support up to 36 Lithium Mobile Batteries. The total length of the LYNK network cables must not exceed 36 m (118 ft).

9.4.3 LYNK Network Cables

CAT6 or higher cables (included with Lithium Mobile batteries) network Lithium Mobile batteries.

9.4.4 LYNK Network Termination

Use a termination resistor on the last Lithium Mobile battery in the LYNK network.

9.5 Updating Battery Firmware

You can update the Lithium Mobile battery firmware in two ways:

- LYNK II and LYNK ACCESS. For instructions, refer to the LYNK II Installation and Operation Manual (805-0033).
- LYNK ACCESS. Refer to the following procedure.

9.5.1 Update Lithium Mobile Firmware With LYNK ACCESS

1. Connect a USB cable to your computer and to the USB Type C port on the Lithium Mobile (see Item #11 in the Battery Features topic).
2. From the Discover Battery website (discoverbattery.com), download and install the latest version of LYNK ACCESS software, compatible with Windows 10 / 11.

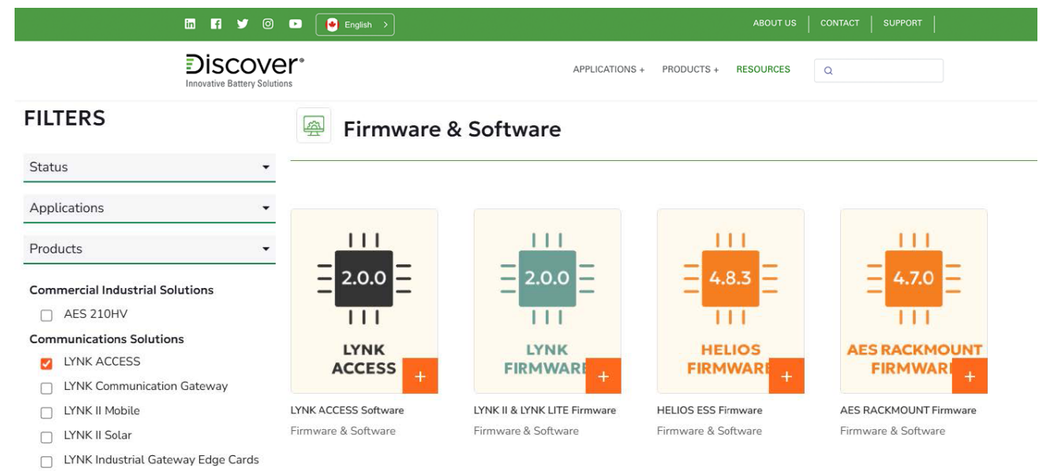

Download the latest Lithium Mobile firmware file.

3. Open LYNK ACCESS and select the **Battery** tab to view the battery information.

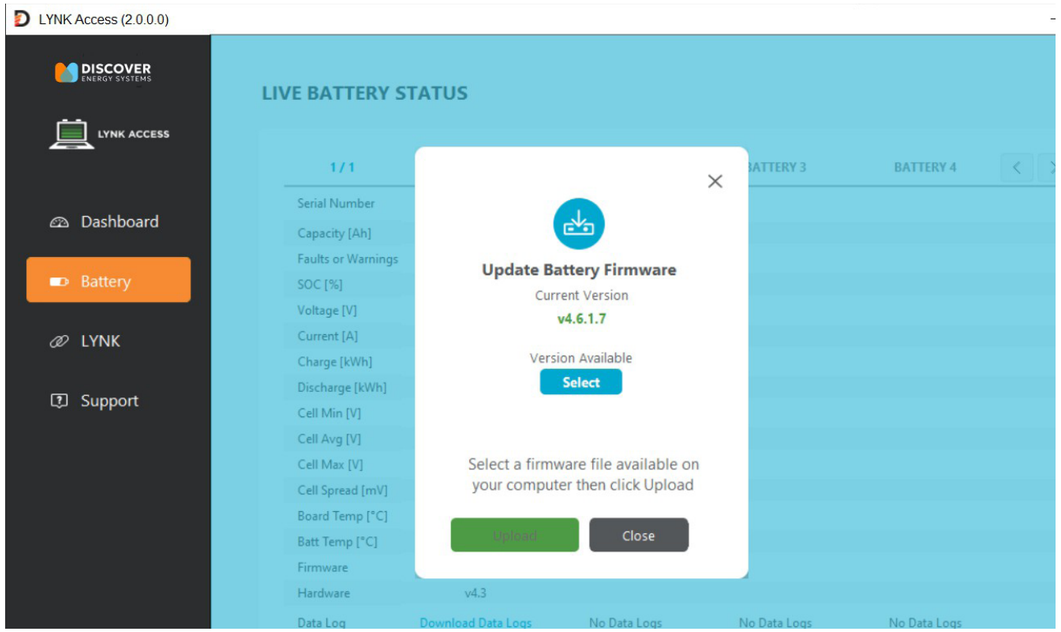

4. Click the Upload Battery Firmware button, and in the dialog box that pops up, click **Select** and open the downloaded battery firmware file.
5. Click **Upload** to complete the battery firmware update process.

NOTE
Use the latest Lithium Mobile firmware to resolve all known issues.

10 OPTIONAL ACCESSORIES

The following optional accessories are available for the Lithium Mobile battery.

Accessory	Part Number
LYNK II Communication Gateway	950-0025
Lithium Mobile Battery to Inverter Power Cables 2 pairs of 200 A cables with lug and quick connect: 2/0 AWG Positive Power Cable (1.0 m, 39.37 in)¤ 2/0 AWG Negative Power Cable (1.0 m, 39.37 in) 950-0070	950-0070
2 pairs of 150 A cables with lug and quick connect: 1/0 AWG Positive Power Cable (1.0 m, 39.37 inch)¤ 1/0 AWG Negative Power Cable (1.0 m, 39.37 inch)	950-0071
Lithium Mobile Parallel Wire Kit (battery to battery) 1 pair of 200 A cables with quick connects: 2/0 AWG Positive Battery Cable (1.35 m, 53 in)¤ 2/0 AWG Negative Battery Cable (1.35 m, 53 in) CAT6 Cable (1.35 m, 53 inch) (COM3/COM4)	950-0068
Lithium Mobile Battery Terminal Connector Set	950-0072
Lithium Mobile RJ45 Battery to Battery Communication Cable (1.35 m, 53 in)	960-0131

Accessory	Part Number
Lithium Mobile RJ45 Waterproof Connector	950-0078
Lithium Mobile Battery Lifting Handles	950-0069

11 INSTALLATION

The following instructions describe how to connect single or multiple batteries in parallel to a DC load.

⚠ WARNING

ELECTRIC SHOCK AND FIRE HAZARD

This equipment must only be installed as specified.
Do not disassemble or modify the battery.

Do not touch exposed contents if the battery case has been damaged.
There are no user-serviceable parts inside.

Failure to follow these instructions may result in death or serious injury.

NOTICE

EQUIPMENT DAMAGE

Some chargers and inverters support temperature-compensated charging. Disable temperature-compensated charging on the charger or inverter.

Do not use or install a battery temperature sensor.

Failure to follow these instructions may result in equipment damage.

NOTE

It is the responsibility of the installer to ensure that all applicable installation requirements and standards are met.

11.1 Tools

- Insulated tools sized to match nuts, bolts, and cables
- True RMS Voltmeter
- Wall stud finder
- Appropriate personal protective equipment

11.2 Location

The Lithium Mobile battery can be installed indoors or outdoors. Install the battery in locations that meet the following requirements:

1. **Vertical Mount or Wall Supported**

   a. **Vertical Mount**. Secure the batteries on the wall so that wall studs support at least 4 bolts of the Vertical mount Bracket.
   b. **Wall supported**. You can install the battery on the ground and attached to the wall.

2. **Spacing**. If installing one or more batteries, allow spacing of at least 25.4 mm (1 in) to the sides. More spacing may be required to access the various ports and terminals on the side of the battery or if using a conduit box.
   There is no spacing requirement above the battery, except for the practical purposes of your application.

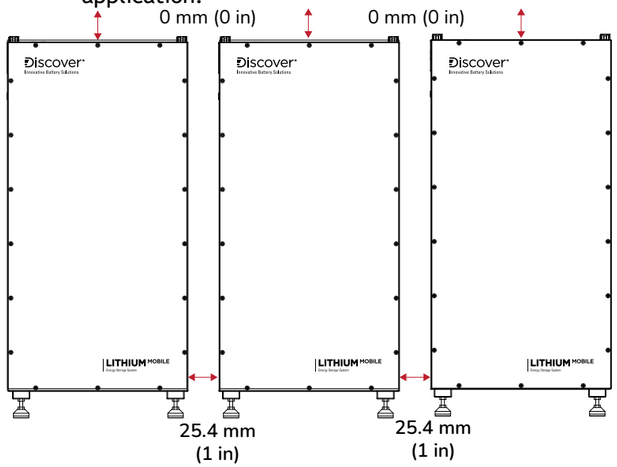

NOTE

If your installation involves a Discover Conduit Box, the minimum spacing between batteries should be at least 180 mm (7 in) to accommodate the width of the Conduit Box and its door latch.

When adjusting the space between batteries, you may need to use the Lithium Mobile Terminal Connector Set (950-0072) to create your own power cables and the Lithium Mobile RJ45 Waterproof Connector (950-0078) to create your own communication cables.

3. **Do not install in direct sunlight**. Avoid installing the battery in an area with high ambient temperature.
4. **Moderate temperature**. The ambient temperature should be between 4°C and 40°C (39.2°F and 104°F). Ambient temperatures of 15°C to 20°C (59°F to 68°F) are ideal for extending battery life.
5. **Ventilation**. If housing the batteries in a room, add vents to allow airflow to the outdoors.
6. **Away from water**. Do not install in locations that are susceptible to flood or water leakage. If flooding is a danger, install above the ground.
   The adjustable feet provide the battery with 48 to 78 mm (1.9 to 3 in) of clearance above the ground. Check with local requirements on whether the installation requires extra space below the battery.
7. **Orientation**. Installing the battery with its back (mounting bracket) pointing down is the

recommended orientation.

Never install the battery upside down with mounting bracket facing up.

If you install the battery in any other orientation, ensure it is securely mounted and supported to prevent movement and stress on the connections.

NOTE
Do not use the battery in a location with excessive vibrations. The battery has not been evaluated for seismic environments. Using this product in a location that does not meet requirements will void the warranty. Using this product in any orientation except the recommended orientation may affect performance and the warranty. If you use an alternative orientation, regularly monitor the battery to check for abnormalities.

11.3 Attaching the Battery onto a Wall

⚠ CAUTION
HEAVY OBJECT Two-person or three-person lift is recommended for the battery. **Failure to follow these instructions may result in injury.**

The following instructions are based on installing the battery onto a wall. Instructions on installing the
inverter itself are provided in the inverter manufacturer's documentation.

1. Use a stud finder to locate the wall studs.

   Identify a location that optimizes usability and support for the inverter and battery. The battery's

   Vertical mount Bracket requires at least 4 bolts supported by wall studs.

2. Attach the rope handles to the battery and using a two/three-person lift, move the battery to the installation location.

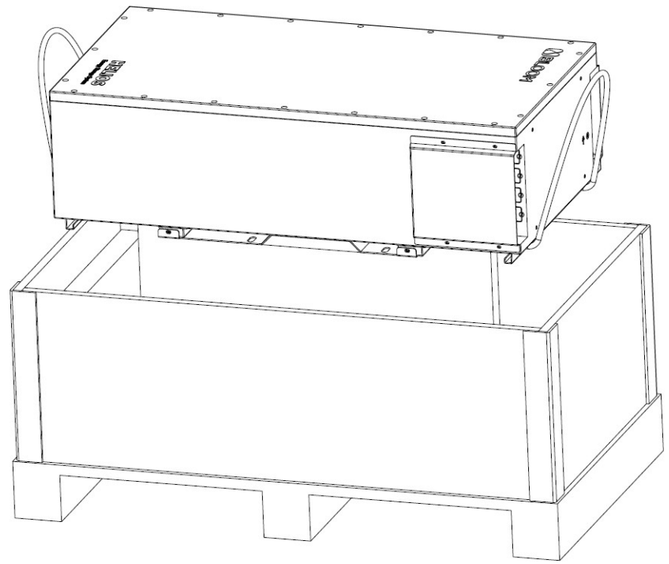

Use rope handles to lift the battery

3. Remove the screws affixing the Vertical mount Bracket to the battery. Put the screws aside in a safe location.
4. If installing the battery off the ground and if the wall studs are not in ideal locations, consider adding appropriate structural supports to spread the weight of the 136 kg (299.83 lb) battery.
5. Use the dimensions in the following diagram to mark the location of holes for the Lithium Mobile battery Vertical mount Bracket. Verify the holes are level. The drill hole heights are based on the feet being at their mid-point, allowing for minor height adjustments up and down.

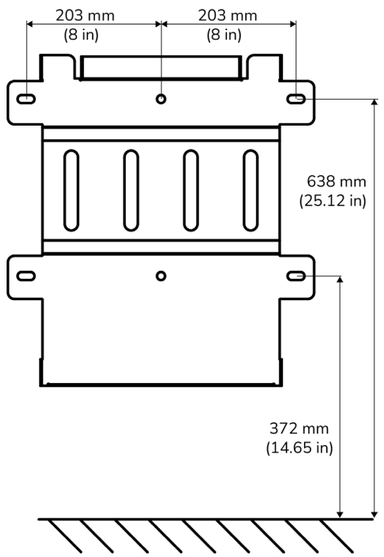

Vertical mount Bracket Drill Holes (height of battery feet are adjustable)

6. Drill the holes for the Vertical mount Bracket.
7. Secure the Vertical mount Bracket to the wall using appropriate fasteners that can support the battery's weight and are compatible with the material of the wall or studs. Use the torque recommended by the manufacturer of the fasteners.
8. Attach the Lithium Mobile battery to the Vertical mount Bracket.
   a. Using a two or three-person lift, the battery lifting handles (950-0069), hydraulic lift, or other industrial equipment, lift and hook the battery onto the top and bottom slots of the Vertical mount Bracket.

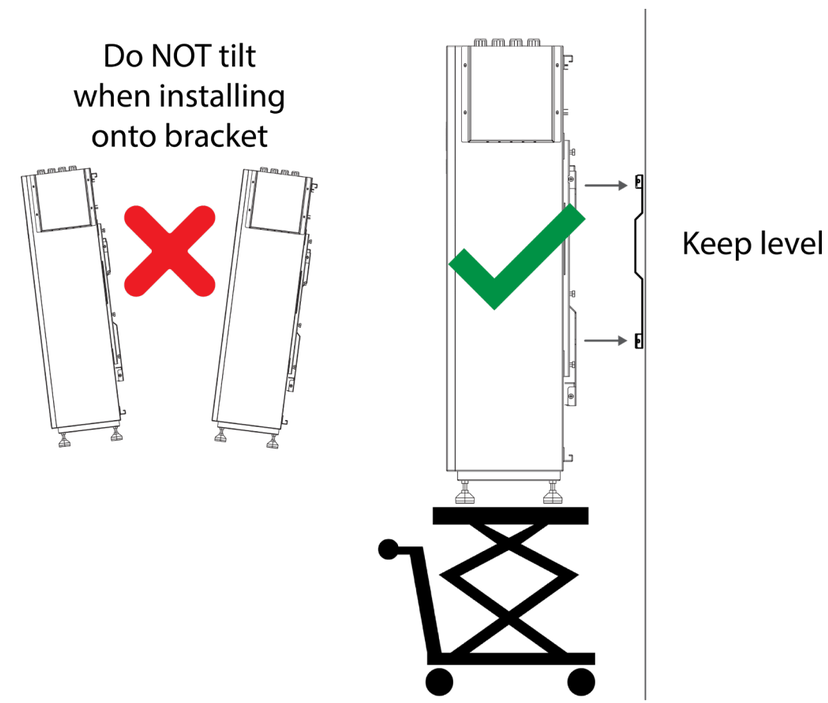

NOTICE
WALL BRACKET DAMAGE During installation, hook the battery onto both the top and bottom slots of the vertical mount bracket simultaneously. Do not tilt the battery when installing, as this may cause the entire weight of the battery to be suspended by only one of either the top or bottom slots and irreparably damage it. **Failure to follow these instructions may result in equipment damage.**

From the right and left sides, secure the battery to the Vertical mount Bracket with the screws that you put aside in step 3. Use a torque of 6 to 6.5 Nm (4.4 to 4.8 ft-lb).

   b. Adjust the height of the Lithium Mobile battery's feet so they press firmly on the ground.
9. Install the inverter (load or similar) near the battery. Refer to its associated manual for instructions.
10. Next, wire the batteries, load, and disconnect.

NOTE
The cover plate protecting the battery terminals and COM ports is installed inside out for shipping purposes. Please keep this in mind when re-attaching the cover plate after wiring the battery and communication cables.

11.4 Wiring

11.4.1 DC Cables

⚠ CAUTION

FIRE HAZARD

Undersized cables can become hot and may potentially catch fire.

Failure to follow these instructions may result in injury.

To create your own cables, use 2/0 AWG (70 mm^2) or 1/0 AWG (55 mm^2) cables. Attach appropriately sized ring terminals on one end and a Lithium Mobile Terminal Connector (950-0072) on the opposite end. Choose the cables and ring terminals to accommodate the maximum voltage of any circuits sharing the same wiring space. Ensure they are sized to local codes and meet the following requirements.

1. Copper-stranded cable. DC cables must be stranded, copper, and rated 90 °C minimum. Terminate the cables on one side with lugs that fit the DC terminals on the inverter, and use the quick connect on the other side of the cable for the positive or negative battery terminal.
2. Minimum and equal cable lengths. Select a location that minimizes the length of battery cables to reduce voltage drop from the impedance leading to reduced performance. If installing multiple batteries in parallel, the length of all the battery cables should be the same.
•
3. Appropriate cable gauge. The cables should be capable of carrying the normally expected current, plus a margin of safety.
4. Proper polarity. Positive (+) is connected to positive (+), and negative (-) is connected to negative (-). Verify the polarity of all connections before energizing batteries.

NOTE

For instructions on connecting terminal connectors to cables, refer to the Lithium Mobile Battery Cable Terminal Connector Set Manual (805-0099).

When selecting the cables for use between the battery and the inverter-charger, note that a single pair of 2/0 AWG (950-0070) cables is suitable for current up to 200 A, and a single pair of 1/0 AWG (950-0071) cables is suitable for current up to 170 A.

The selection between using two pairs or a single pair of cables between the load and the batteries, is based on safely matching the load of the charger (A) and the cable's maximum current carrying capacity.

11.4.2 DC Protection

⚠ CAUTION

FIRE HAZARD

Undersized fuses and disconnects may become overloaded and potentially cause a fire.

Fuses and disconnects are required to open before the cable reaches its maximum current carrying capability.

Failure to follow these instructions may result in injury.

Each battery comes equipped with a 200 A integrated breaker. When multiple batteries are installed in parallel, additional DC overcurrent protection is recommended between the battery bank and load.

1. Appropriate size. Size the fuses and disconnects following local codes to protect the wiring in the system. The fuses and disconnects are required to open before the cable reaches its maximum current carrying capability.
2. Install protection. When installing battery protection, ensure the fuse and disconnect are located as close as possible to the battery. Local electrical codes may specify the maximum allowable distance.
•

This disconnect should be sized to accommodate the maximum expected electrical load of your system. Always consult with your local authority having jurisdiction (AHJ) to correctly size and select breakers that meet all applicable requirements for your specific application.

NOTE

AC circuit breakers and DC circuit breakers are not interchangeable. Check the label on the circuit breaker to ensure it is the correct type and rating. Use only DC circuit breakers.

For non UL installations, the local electrical code in your area may require disconnect switches either in the positive only, or both positive and negative. Refer to your applicable code and check with the authority having jurisdiction to confirm local requirements.

11.4.3 Terminal Connections and Hardware

Plug-and-pull quick connects are used to mate with the plug-and-pull terminals on the Lithium Mobile battery.

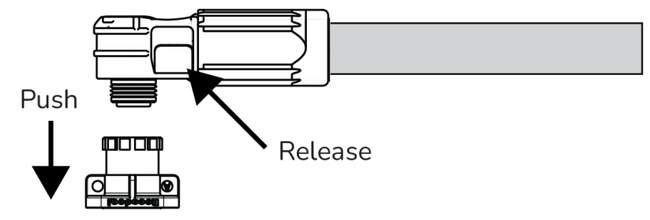

Plug-and-pull Quick Connect

1. Plug the connector into the plug-and-pull terminal.
2. Gently pull the connector to confirm it is snapped in place.
3. To disconnect, press the release button on the side of the connector.

•

11.5 Battery Installation

⚠ CAUTION

FIRE HAZARD

Use cables that meet specifications. Undersized cables can become hot and potentially catch fire.

Failure to follow these instructions may result in injury.

NOTICE

EQUIPMENT DAMAGE

Some inverter-chargers support temperature-compensated charging. Disable temperature compensated charging on the charger or inverter.

Failure to follow these instructions may result in equipment damage.

To optimize performance, battery cables (battery to load and battery to charger) must meet the following requirements:

1. **Minimum cable length**. Select a location that minimizes the length of battery cables to reduce the voltage drop.
2. **Equal cable gauge**. The battery cables should be the same gauge.
3. **Equal cable length**. The battery cables should be of equal length.
4. **Connectors**. When creating your own cable, follow cable specifications and use battery terminal specific connectors. Refer to OPTIONAL ACCESSORIES.

Install equipment following the standards set by the local authority having jurisdiction. The following instructions assume the battery and inverter (load) are attached to the wall.

NOTICE

EQUIPMENT DAMAGE

Avoid short circuits. Short circuits will damage the battery and void the warranty.

Failure to securely lock the ends of battery cables to the receiving pins on the battery will increase resistance and lower voltage, leading to burnout of the terminals and voiding of the warranty.

Some inverter-chargers support temperature-compensated charging. Disable temperature compensated charging on the charger or inverter.

Do not use or install a battery temperature sensor.

Failure to follow these instructions may result in equipment damage.

11.5.1 Single Battery Installation Procedure

⚠ CAUTION

ELECTRIC SHOCK AND FIRE HAZARD

Take precautions to avoid bridging the terminals.

Do not contact the terminals with metal mountings, fixtures, or body parts.

Failure to follow these instructions may result in injury.

Install equipment following the standards set by the local authority having jurisdiction. The following instructions assume the battery and DC load have been attached to the wall.

1. Disconnect the cover plate protecting the positive and negative terminals.
2. Prepare the load and battery for wiring.
   a. If the load is wired to a power source, open the disconnect and set the load OFF.
   b. Use a DMM or other voltage measuring device to confirm the circuit is de-energized.
   c. If the circuit in which the battery is installed has a disconnect, open the disconnect to isolate the battery.
   d. Set both the battery BMS and the breaker to the OFF position.
   e. Use a DMM or other voltage measuring device to confirm the circuit is de-energized.
3. Wire the load.
   Use the Lithium Mobile Terminal Connector Set (950-0072) with 2/0 AWG (70 mm^2) cables and

   appropriately sized ring terminals to create your own battery cables.

   Or alternately, you can use the Battery to Inverter Power Cables 2/0 AWG (950-0070) to wire the batteries. Select the cable that is compatible with the expected power load.
   a. Ensure the cable connections are clean and in working order.
   b. If required by the system, connect a circuit breaker between the load and battery.
   c. Connect a positive power cable to the positive battery terminal on the load, and the other end of the power cable to the positive terminal on the circuit breaker.
      Connect a negative power cable to the negative terminal on the load, and the other end of the power cable to the negative terminal on the circuit breaker.
   d. Connect the positive battery cable to the opposite positive terminal on the circuit breaker.
      Connect the negative battery cable to the opposite negative terminal on the circuit breaker.

NOTE

The breakers should be sized to protect the conductors between the battery and the load.

If the breaker housed in the inverter is sufficient for the intended application, an external breaker may not be required. Refer to your Local Authority Having Jurisdiction for guidance.

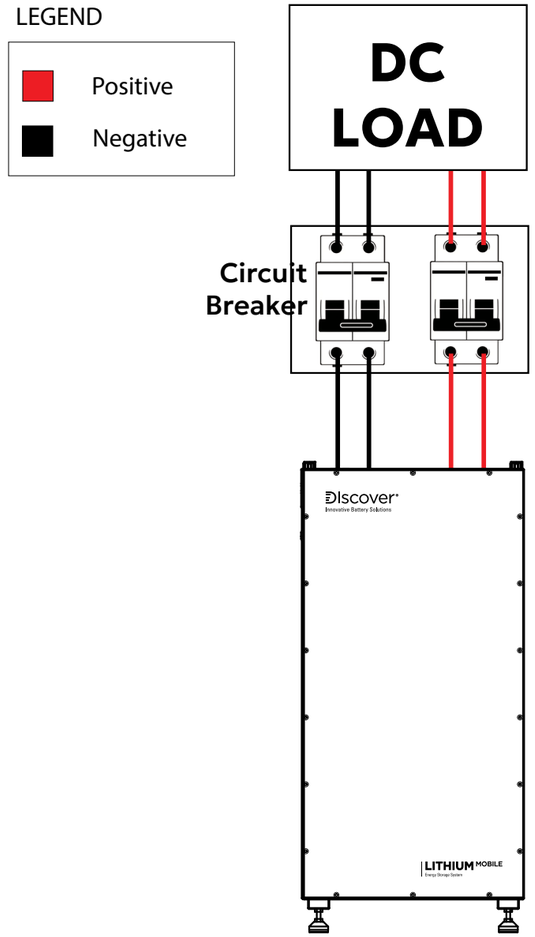

Wiring for One Battery

NOTE
For multiple battery installation diagrams, refer to <link>Multiple Battery Installation Procedure (Parallel Wiring Kit) or More Than Three Battery Installation Procedure (Busbar).

Connect the positive battery cables to the receiving pins of the positive battery terminals and push down to enable the connection. Refer to 9.4.3 Terminal Connections and Hardware.

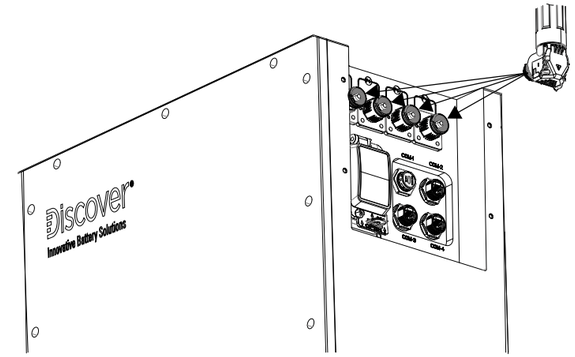

Connect Cables to Battery Terminals

4. Connect the negative battery cables to the receiving pins of the negative battery terminals and push down to enable the connection.
5. Connect the CAN communication cable. See Setting Up Closed-Loop Communication with the LYNK II Gateway or Setting Up Closed-Loop Communication Without the LYNK II Gateway.
6. Set the battery breaker ON (close).
7. Close the circuit breaker if it is open.
8. Set the battery BMS ON (ON/OFF key).
9. Re-attach the cover plate to protect the positive and negative battery terminals and to prevent the disconnection of sockets and terminals during operation.

NOTICE
Avoid short circuits. Short circuits will damage the battery and void the warranty. Failure to securely lock the ends of battery cables to the receiving pins on the battery will increase resistance and lower voltage, leading to burnout of the terminals and voiding of the warranty. Some inverter-chargers support temperature-compensated charging. Disable temperature-compensated charging on the charger or inverter. Do not use or install a battery temperature sensor.

11.5.2 Multiple Battery Installation Procedure (Parallel Wiring Kit)

⚠ CAUTION
ELECTRIC SHOCK AND FIRE HAZARD Take precautions to avoid bridging the terminals. Do not contact the terminals with metal mountings, fixtures, or body parts. **Failure to follow these instructions may result in injury.**

NOTICE

UNBALANCED BATTERY CELLS

Paralleling more than three batteries using the Parallel Wiring Kit may lead to unbalanced battery cells.

Failure to follow these instructions may result in equipment damage.

NOTICE

EQUIPMENT DAMAGE

When paralleling multiple batteries, the maximum current is limited by the internal busbars in the Lithium Mobile battery. For the maximum current values of batteries in parallel, refer to the table in the Minimum Specifications for Battery Systems topic.

Failure to follow these instructions may result in equipment damage.

Batteries used in a parallel system must meet the following requirements:

- Same model. Batteries must be the same model.
- Equal voltage. The battery has a Pre-Charge System that allows you to connect batteries at different SOC. The best practice is to confirm batteries are within 50 mV (0.05 V) of each other before installing them in parallel.

NOTE

To connect Lithium Mobile batteries in parallel, use busbars, the Lithium Mobile Parallel Wire Kit (950-0068), or create your own appropriately-sized cables with the Lithium Mobile Terminal Connector Set (950-0072).

The following instructions identify how to connect batteries and inverters in parallel using the Lithium Mobile Parallel Wire Kit (950-0068). One kit is required to parallel two batteries. Two kits are required to parallel three batteries.

Install equipment following the standards set by the local authority having jurisdiction.

1. Prepare the load and battery for wiring.
   a. If the load is wired to a power source, open the disconnect and set the load OFF.
   b. Use a DMM or other voltage measuring device to confirm the circuit is de-energized.
   c. If the circuit in which the battery is installed has a disconnect, open the disconnect to isolate the battery.
   d. Set both the battery BMS and the breaker to the OFF position.
   e. Use a DMM or other voltage measuring device to confirm the circuit is de-energized.
2. Wire the DC load.

   The Battery to Inverter Power Cables 2/0 AWG (950-0070) are available to wire the batteries to the DC load. Confirm the cable is compatible with your inverter and inverter settings.

NOTE

If your installation requires longer cables, use the battery terminal connectors.

Paralleling more than three batteries using the Parallel Wiring Kit may lead to unbalanced battery cells.

Ensure the cable connections are clean and in working order.

a. Connect the positive battery cable to a positive battery terminal on the DC load.

•

b. Connect the negative battery cable to a negative terminal on the DC load. Do not connect them to the batteries yet.

3. Connect the positive (+) battery cable in the Lithium Mobile Parallel Wire Kit (950-0068) to a receiving pin of the positive battery terminals on a battery at one end of the battery bank. Push the ends of cables against the receiving pins to secure the connection.

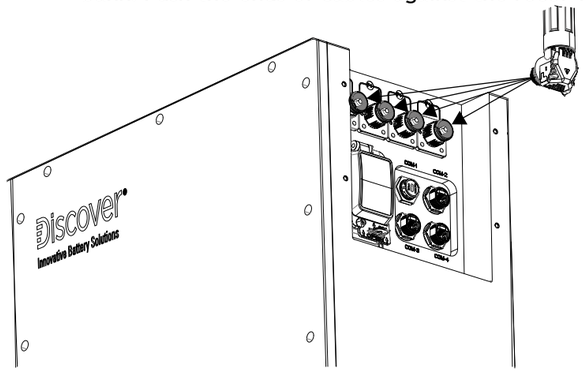

Connect Cables to Battery Terminals

4. Connect the negative (-) battery cable to a receiving pin of the negative battery terminals on the battery at the other end of the battery bank. Push the ends of cables against the receiving pins to secure the connection.

•

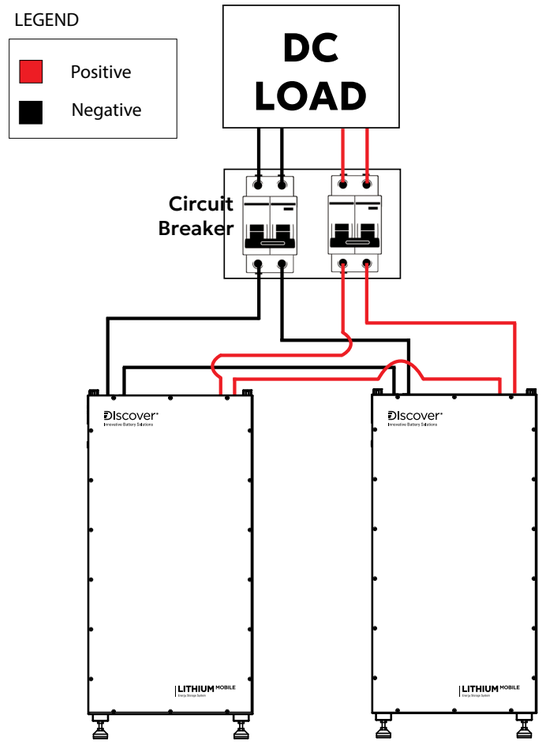

Two Batteries in Parallel (One Parallel Wire Kit 950-0068)

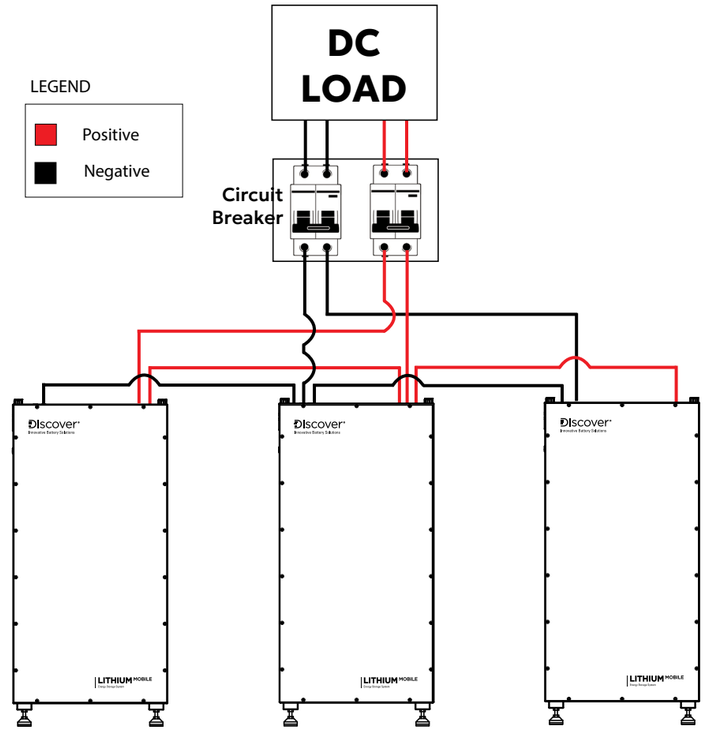

Three Batteries in Parallel (Two Parallel Wire Kits 950-0068)

5. Connect the positive (+) and negative (-) battery cables in the Lithium Mobile Parallel Wire Kit (950-0068) to the receiving pins of the positive and negative battery terminals on batteries, as shown in the diagrams. Push the ends of cables against the receiving pins to secure the connection. Refer to “Terminal Connections and Hardware” in the Wiring topic.
6. Connect the positive battery cables from the DC load to batteries in the battery bank, and connect the negative batteries cables from the DC load to batteries in the battery bank as shown in the images above. Push the ends of cables against the receiving pins to secure the connection.
7. Connect the CAN communication cables.
8. Set all battery BMS to ON (ON/OFF key).
•
9. Energize the system by setting all battery breakers to ON (close).
10. Close the circuit disconnect if it is open.

NOTICE

TERMINAL BURNOUT

Failure to securely lock the ends of battery cables to the receiving pins on the battery will increase resistance and lower voltage, leading to burnout of the terminals and voiding of the warranty.

Failure to follow these instructions may result in equipment damage.

NOTE

Whenever replacing an old battery in a parallel string, use a battery of the same age, model, capacity, and voltage.

Before installing the battery in parallel, charge each battery to 100% SOC. Breakers, fuses, or other disconnects may open if the batteries are not at the same SOC.

11.5.3 More Than Three Battery Installation Procedure (Busbar)

To connect more than three batteries in parallel, use busbars sized so that they are capable of handling the maximum total charge and discharge current capacity of the loads and batteries.

NOTICE

EQUIPMENT DAMAGE

To maintain UL9540 DC ESS certification, connect the Lithium Mobile batteries in groups of one (1), two (2), or three (3) batteries as shown in the following diagrams.

The internal busbars within each Lithium Mobile battery limit the maximum allowable current of paralleled batteries. Refer to the table in the Minimum Specifications for Battery Systems topic for current ratings.

To determine the maximum system current, multiply the current from the applicable row (1 battery, 2 batteries, or 3 batteries) by the number of corresponding parallel groups.

Failure to follow these instructions may result in equipment damage.

NOTICE

BALANCING BATTERY CELLS

All DC positive and DC negative cables from the busbar to each battery should be the same gauge and same length.

Failure to follow these instructions may result in equipment damage.

Connecting Multiple batteries: Groups of 1

Each battery is connected directly to the busbars.

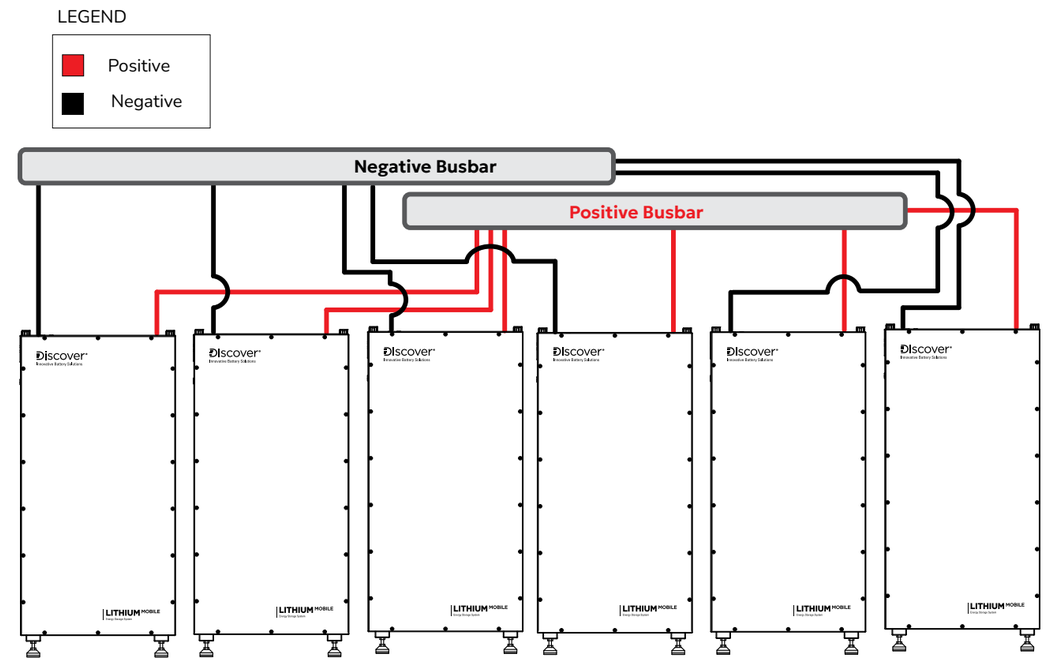

Six Groups of 1 (UL9540: DLM-16000-48_1)

Connecting Multiple batteries: Groups of 2

Batteries are paralleled in groups of two and connected to the busbar.

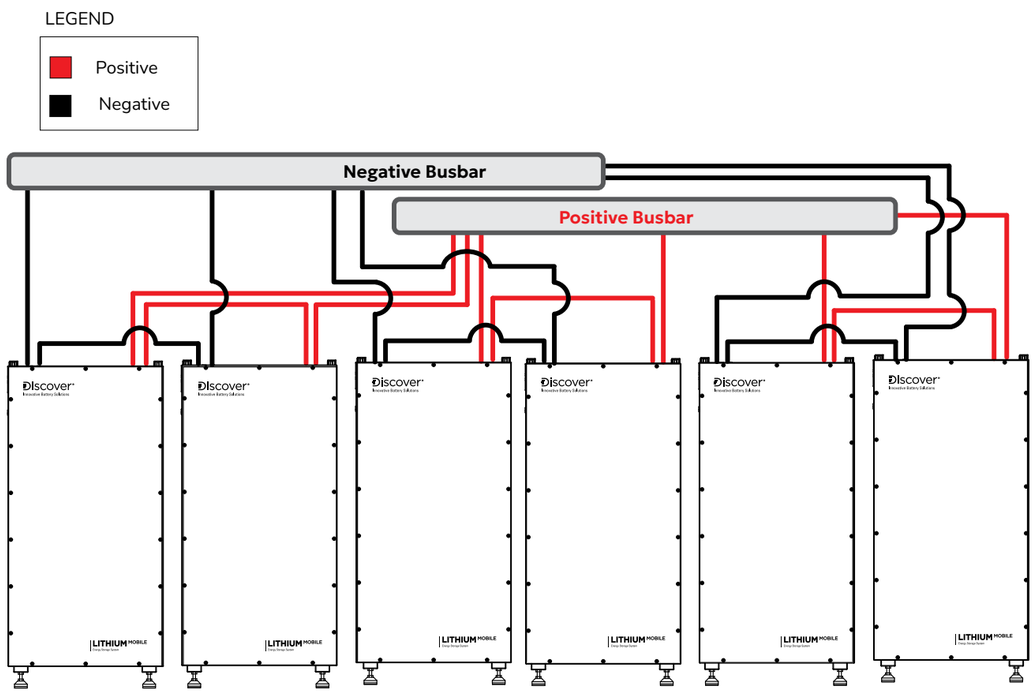

Three Groups of 2 (UL9540: DLM-16000-48_2)

Connecting Multiple batteries: Groups of 3

Batteries are paralleled in groups of three and connected to the busbar.

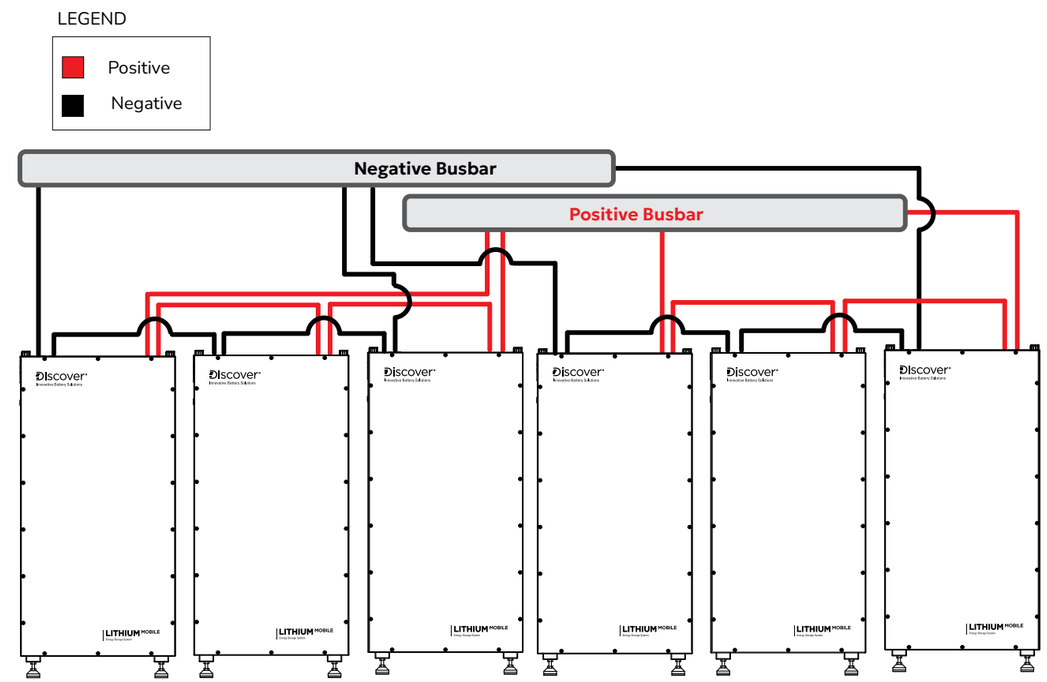

Two Groups of 3 (UL9540: DLM-16000-48_3)

11.6 Grounding

At the top of the Lithium Mobile battery is a grounding screw.

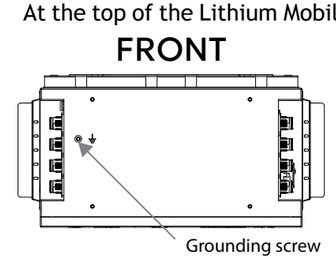

Grounding Screw at Top of Lithium Mobile Battery

11.6.1 Grounding the Batteries

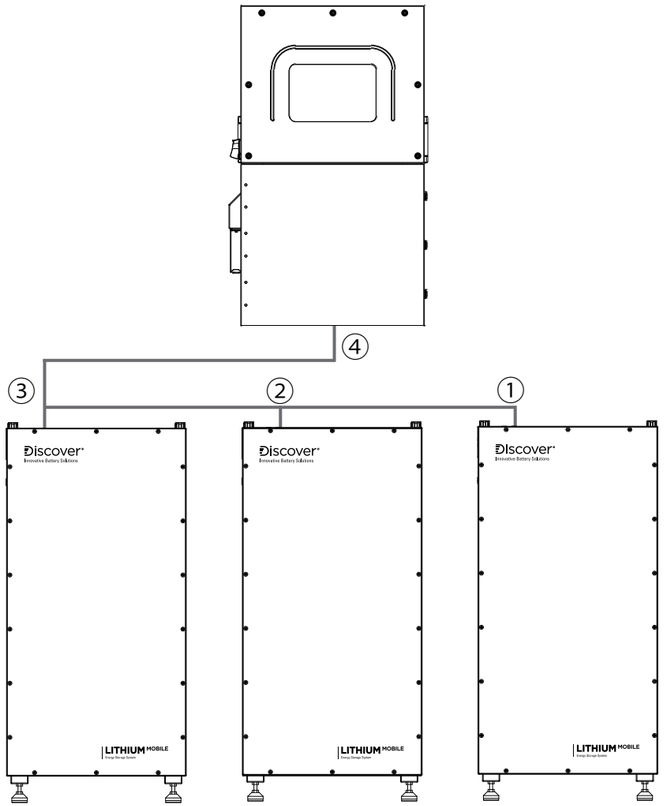

Grounding Multiple Batteries

1. Ground the first battery. Secure an appropriately sized grounding wire to the grounding screw on the farthest battery. Use a torque of 2.5 to 3 Nm (1.84 to 2.2 ft-lb). Refer to your applicable code and check with the authority having jurisdiction to confirm local requirements. If this is the only battery in the system, jump to step 3. Otherwise, go to step 2.
2. Ground the second or more batteries. Pass the wire from the previous battery and secure the wire to the grounding screw on this battery. Secure another grounding wire to the grounding screw on this battery. Repeat until all the batteries are wired.
•
3. Ground to the inverter. Pass the wire from the last grounded battery to the inverter's grounding port.

11.7 Closed-Loop Communication

- LYNK Network
- Setting Up Closed-Loop Communication with the LYNK II Gateway
- Setting Up Closed-Loop Communication without the LYNK II Gateway

The Lithium Mobile battery supports closed-loop communication using two different methods.

1. With LYNK II Gateway. Connect CAT6 or higher cables between the COM3/COM4 port on the Lithium Mobile battery and the LYNK II Gateway, and between the LYNK II Gateway and the CAN port on the inverter.

   For a list of inverters supported by the LYNK II Gateway and for information on configuring the LYNK II, refer to the LYNK II Installation and Operation Manual (805-0033).

2. Without LYNK II Gateway. The COM2 port on the Lithium Mobile battery allows direct connection to most inverter brands using a CAT6 or higher cable to the inverter's corresponding CAN port.

   For the list of inverters that support closed-loop communication without the LYNK II, refer to Lithium Mobile Closed-Loop Communication - Supported Inverters.

11.7.1 LYNK Network

The COM3/COM4 ports on the Lithium Mobile battery allow communication with other LYNK-enabled devices on the LYNK network.

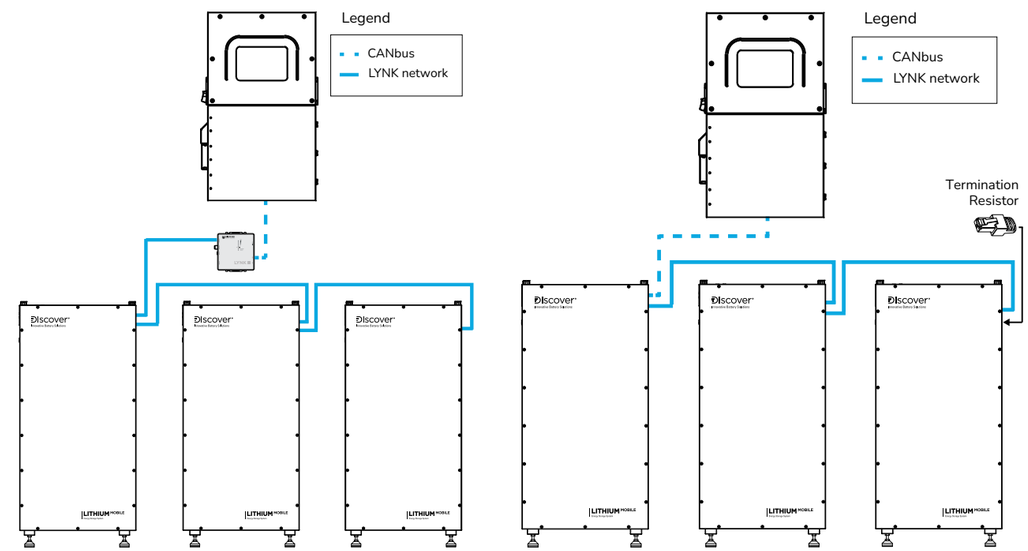

LYNK Network in Closed-Loop Communication With and Without LYNK II

NOTE
When setting up closed-loop communication without the LYNK II Gateway, connect a termination resistor on the last battery in the LYNK network.

Networking Guidelines

- Separate data and power cables. Allow for separation between data and power cables. Avoid data interference by running network cables separately from power cables.
- Allow for LYNK Network cable slack. Ensure that LYNK Network cables are slack and not in tension.
- Isolate the LYNK Network. Do not mix other networks with the LYNK Network.

NOTICE
EQUIPMENT DAMAGE Mixing the LYNK Network with other networks may result in equipment malfunction and damage. **Failure to follow these instructions may result in equipment damage.**

11.7.2 Setting Up Closed-Loop Communication with the LYNK II Gateway

NOTE
Refer to the LYNK II Installation and Operation Manual (805-0033) for information on setting up the LYNK II Communication Gateway for your particular inverter-charger.

If using the LYNK II Communication Gateway, connect the CAT6 communication cable from the inverter-charger to the LYNK device and then to each battery.

1. Attach the CAT6 or higher cable from the inverter to the LYNK II Communication Gateway's CAN port.

LYNK II Communication Gateway

2. Attach another CAT6 or higher cable to the LYNK II Communication Gateway's LYNK port, then attach the other end of the CAT6 or higher cable to COM3 or COM4 (LYNK port) on the battery.
3. If paralleling multiple Lithium Mobile batteries, attach CAT6 or higher cables to the COM3/COM4 ports to connect all the batteries. Attach a CAT6 or higher cable to COM3 or COM4 (LYNK port) on the first battery to COM3/COM4 on the next battery, and so on, until all the batteries are connected.

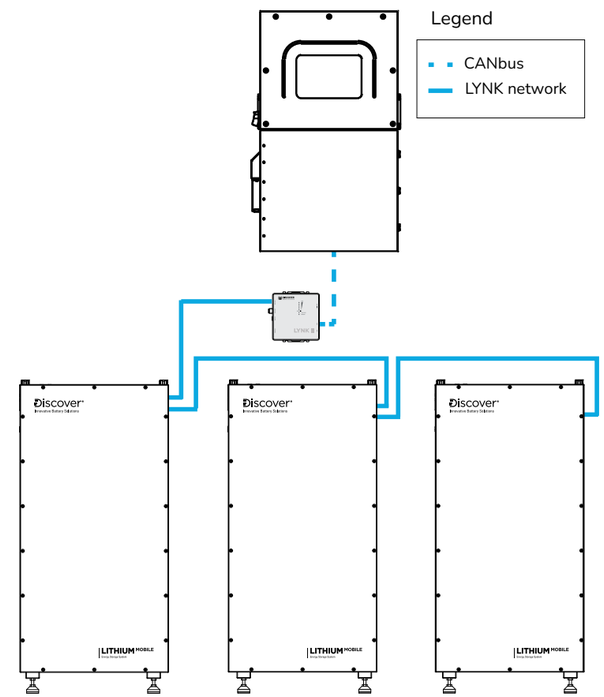

LYNK II Connection Between Inverter and Batteries

Testing and Verification of the LYNK Network

Perform network verification with the LYNK II Communication Gateway (950-0025).

1. If the LYNK Network Bus indication LED is illuminated, power and communication for the LYNK network are active.
2. Use LYNK ACCESS software through a computer to confirm the number of batteries in the LYNK network.
3. Use LYNK CLOUD to remotely monitor and troubleshoot the batteries.

11.7.3 Setting Up Closed-Loop Communication Without the LYNK II Gateway

The Lithium Mobile battery supports closed-loop communication without the LYNK II Gateway for many inverter-chargers. Refer to Lithium Mobile Closed-Loop Communication - Supported Inverters for the list of supported inverter-chargers.

Depending on the inverter model, you can use CAT6 or higher straight cables or modified cables. Refer to Cables for Closed-Loop Communication Without LYNK II for specifications on the communication cable for your inverter.

1. After confirming the Lithium Mobile supports CAN communication with your inverter without the LYNK II, and after setting up the appropriate CAT6 or higher cable, attach it from the inverter's CAN port to the Lithium Mobile battery's COM2 port (CAN port).

2. If paralleling multiple Lithium Mobile batteries, attach CAT6 or higher cables to the COM3/COM4 ports to connect all the batteries. Attach a CAT6 or higher cable to COM3 or COM4 (LYNK port) on the first battery to COM3/COM4 on the next battery, and so on, until all the batteries are connected.

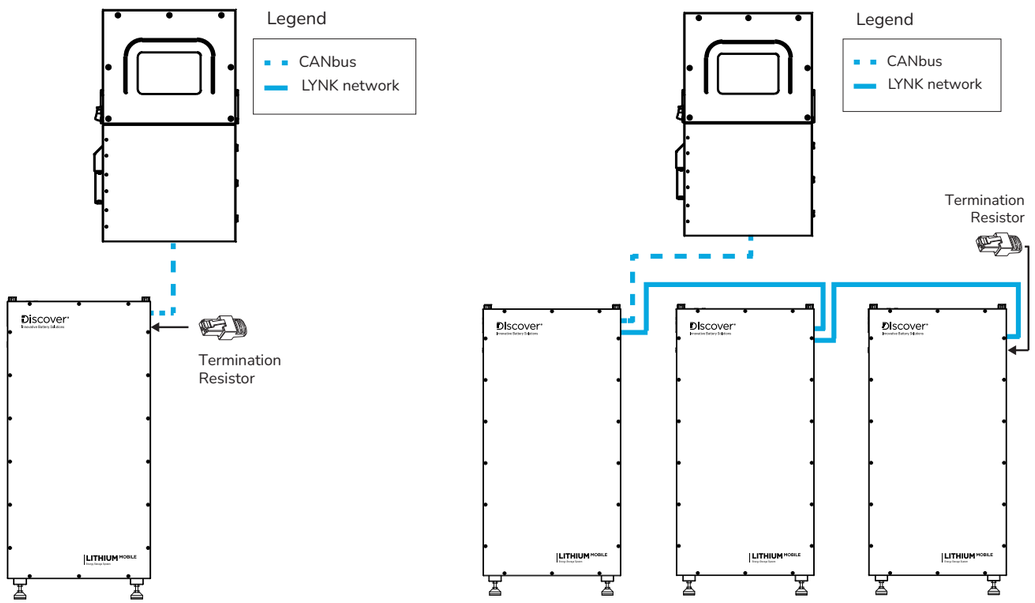

Closed-Loop Communication Without LYNK II

NOTE
When setting up closed-loop communication without the LYNK II Gateway, connect a termination resistor on the last battery in the LYNK network.

12 OPERATION

The BMS prevents battery operation outside of specified operating conditions. Understand each of these protections and how to set up the system accordingly. Refer to the table in the Protection Specifications topic.

NOTICE
VOID WARRANTY Intentional bypassing of the BMS to operate the battery outside maximum and minimum limits void the warranty. **Failure to follow these instructions may result in equipment damage.**

Starting the Battery

For the steps on starting the battery, refer to Battery Startup Procedure.

Low Voltage Cut-Off

As controlled by the application, program the low voltage cut-off at or above the Low Voltage Disconnect in as shown in Electrical Specifications. This action disconnects the load before the BMS enters low-voltage protection.

State of Charge

A voltage-based battery meter designed for lead-acid batteries will not provide an accurate state-of-charge (SOC) for lithium batteries. The LYNK II Communication Gateway (950-0025), available from Discover, can be used to communicate an accurate state of charge to other devices.

NOTICE
BATTERY DAMAGE Storing or leaving the battery at 0% SOC will lead to irreversible damage and void the warranty. **Failure to follow these instructions may result in equipment damage.**

12.1 Charging

Each electrical system will have different characteristics and balance-of-system components. Charger settings may require modifications to optimize system performance.

NOTICE
BATTERY DAMAGE Confirm that the charging device cannot produce transient spikes that exceed the published terminal voltage limits for the battery. Confirm the charging curve meets the battery's charging requirement. Never charge a visibly damaged or frozen battery. If the battery is stored in a cold environment, it may become frozen and may not accept a charge. Be aware of the supported Charge Temperature range (refer to Environmental Specifications) for your battery and recharge before it approaches 0% SOC. **Failure to follow these instructions may result in equipment damage.**

12.1.1 Closed-Loop Charging

Closed-loop charging is a method whereby the battery communicates with a charger and requests a specific charge voltage. Closed-loop charging reduces charge time and increases balancing efficiency compared to open-loop charging.

The Lithium Mobile battery can communicate over a CAT6 or higher cable to support closed-loop charging with the inverters listed in the table in the Lithium Mobile Closed-Loop Communication - Supported Inverters topic. Whether the communication cable is a standard

patch cable or requires customized wire pinouts for the RJ45 connectors depends on the inverter manufacturer.

The Lithium Mobile supports closed-loop charging with many other inverter-chargers when combined with the LYNK II Communication Gateway. Refer to the appropriate Application Note available from www.discoverbattery.com for the set up of closed-loop parameters and integration with specific brands of solar inverter-chargers, solar charger controllers, mobile inverter-chargers, and industrial chargers.

12.1.2 Configure Closed-Loop Charge Settings (LV-BMS)

Dynamic Voltage

The native communication settings on previous models of Lithium Mobile used dynamic voltage to adjust charge settings as it approached a full charge (100% SOC). However, some newer inverters lack accurate tracking of shifting charge voltage (CV) values.

When the inverter's CC/CV control reacts too slowly or too aggressively to changing voltage targets, it can momentarily drive the DC bus above the requested CV value, triggering over-voltage alarms and unstable charging behavior, even though the battery is operating normally.

For those experiencing these charge issues, you can use LYNK ACCESS 2.5.0 or later and Lithium Mobile firmware 4.10.0 or later to change the charge settings to Dynamic Current.

Change to Dynamic Current

To eliminate overshooting the target voltage, the Lithium Mobile now supports **Dynamic Current** control, which replaces voltage-based control when operating at a higher SOC. When you use dynamic current control, instead of tracking a shifting CV target, the inverter follows a stable, battery-defined current limit that the inverter can regulate accurately. This removes reliance on the inverter's CC/CV voltage loop, prevents DC-bus overshoot, and reduces over-voltage alarms.

Configure Lithium Mobile to Use Dynamic Current in LV-BMS

1. Plug your computer into the battery's USB-C port (or LYNK II Gateway) and open LYNK Access.
   a. Update LYNK ACCESS to 2.5 or later.
   b. If required, update LYNK II firmware to 2.5 or later.
   c. In the Battery tab, update Lithium Mobile firmware to 4.10.0 or later.
   Download the latest firmware from the Discover website www.discoverbattery.com.

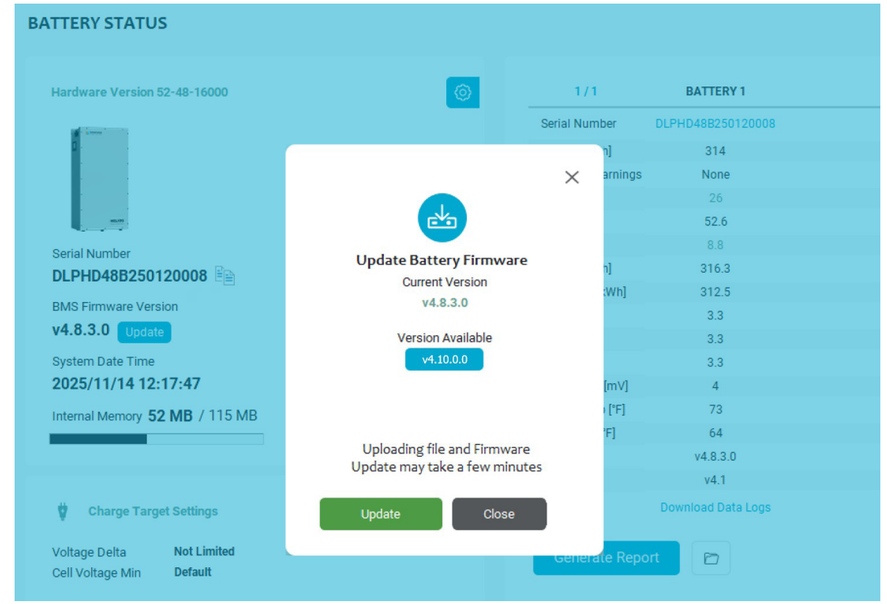

Update Battery Firmware

2. Click the CAN Settings button and set the following.

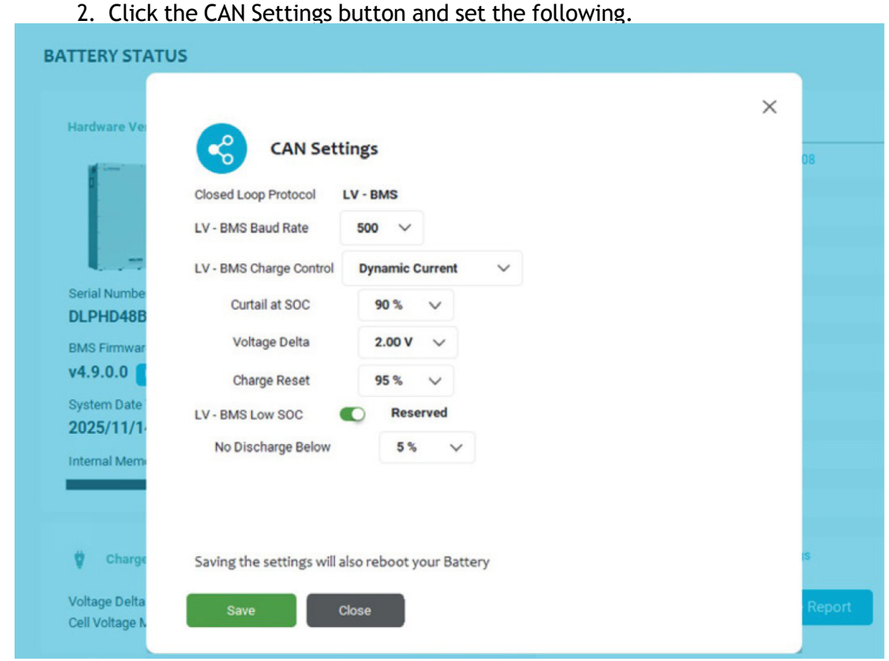

Setting	Value	Comments
Closed Loop Protocol	LV-BMS	You can use this protocol with inverters that support the Pylon protocol, such as Sol-Ark, Victron, and others.
LV-BMS Baud Rate	500	The default rate of 500 kbps is compatible with most devices.
LV-BMS Charge Control	Dynamic Current	The default values for Dynamic Current apply to most applications. Customize these settings only with guidance from Discover Energy.
Curtail at SOC	90%	SOC when charging slows down or stops. Use 80-85% for high charge current, and up to 95% for lower charge current.

Setting	Value	Comments
Voltage Delta	2.00 V	Controls how quickly the charge current tapers, based on the difference between the pack voltage and the algorithm's target voltage (56.0 V). Higher values produce a slower current-taper response.
Charge Reset	95%	Defines the SOC hysteresis used to restart charging after a full charge cycle. The system resumes charging after the battery falls below this SOC threshold, to prevent repeatedly cycling at the top of the charge.
LV-BMS Low SOC	Reserved	Creates a charge reserve on the battery to prevent deep discharge events that would otherwise require a manual recovery.
No Discharge Below	5%	

Click Save.

NOTE
If you are using a LYNK II Gateway in your system with an inverter that supports the Pylon protocol, such as Sol-Ark, Victron, and others, you can use the LV-BMS protocol instead and use the same configuration settings described above.

12.2 When to Charge the Battery

- **Opportunity charging is OK**. Charging the battery after every use will not reduce its life.
- **Partial State-of-Charge is OK**. If the battery SOC is greater than 10% at the end of discharge, it does not require an immediate charge. However, do not continually leave the battery in a partial state of charge as that will reduce its performance as battery cells will become unbalanced.
- Every 4 cycles, fully charge the battery so the inverter-charger reaches the charge termination criteria. This ensures the battery cells are balanced and that each battery cell is fully charged.
- **Charge if below 10% SOC**. If the battery has been discharged below 10% SOC, it must be charged within 24 hours to avoid permanent damage to the battery. Otherwise, irreversible damage to the battery cells will occur in a very short period of time.
- **Low charge current extends life**. Charging at 50% of nominal current or lower helps extend the battery cycle life.
- **Charge within the proper temperature range**. Ensure that charging is within the charge temperatures specified in Environmental Specifications.

NOTICE
BATTERY DAMAGE The battery must be charged within 24 hours if discharged below 10% SOC. Otherwise, irreversible damage to the battery cells will occur in a very short period of time and void the warranty. Do not continually leave the battery in a partial state of charge as that will unbalance the battery cells. Fully charge the battery every 4 cycles so each battery cell is fully charged. If the end of charge criteria is not regularly performed, multiple balancing charges may be required to fully charge each battery cell. The following are two ways to perform a balancing charge. Reduce charge termination to 100 mA and maintain 55.2 V for 10 hours. Charge in a closed-loop configuration. **Failure to follow these instructions may result in equipment damage.**

NOTE
When the Lithium Mobile battery cells are between -25°C (-13°F) and 5°C (41°F) and either connected to a charging source or SOC is 50% or more, energy is diverted to the internal heater until the battery cells reach 8°C (46.4°F). If the BMS triggered the Under-temperature in Charge protection, the battery will not allow charging until the cell temperature is 4°C (39.2°F).

12.3 Charging Profile

The Power Conversion device will require setting up a charging profile even if you use closed-loop charging. Using the controller of the Power Conversion device, set up a charging configuration with a Lithium charge profile that matches the charge and discharge settings. Refer to Electrical Specifications for charging parameters.

Refer to the appropriate Application Note from www.discoverbattery.com for setting up closed-loop parameters and integrating inverter-chargers and battery chargers.

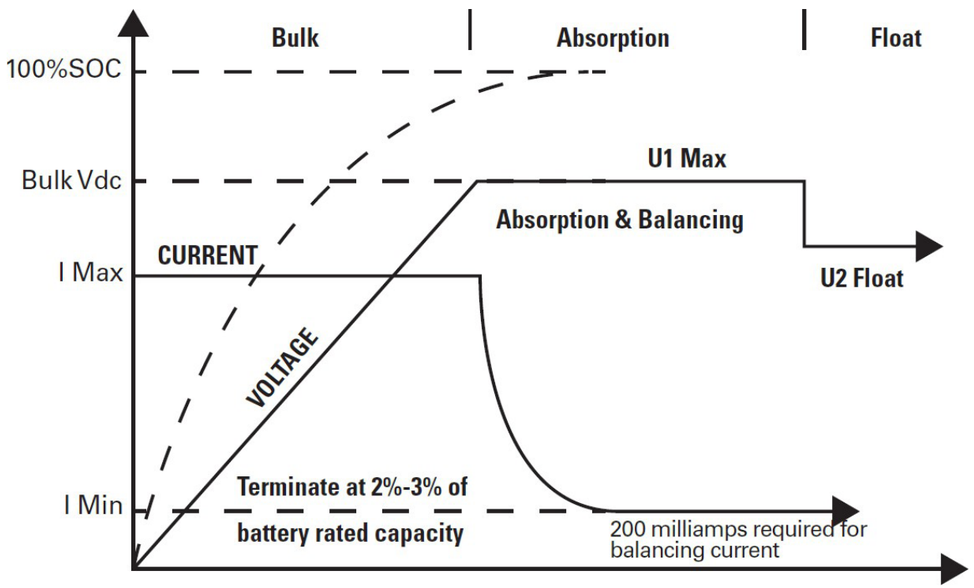

Charge Graph

NOTICE
BATTERY DAMAGE Charge with a Lithium charge profile matching the specifications of the Lithium Mobile battery. Do not charge using a lead-acid charging profile. Charging using a lead-acid profile will void the warranty. **Failure to follow these instructions may result in equipment damage.**

NOTE
Charging at 50% of nominal current or lower will extend the battery cycle life.

12.3.1 Bulk Charge

Bulk phase. The Bulk Charge is the first phase of the charging process, called the constant current phase. This phase is when the charger's maximum current is directed to the battery until reaching the desired voltage. The Bulk phase will recharge the battery to approximately 90-95% SOC.

A single-stage charge may be appropriate if the charging source is a generator or other charge source that is inefficient at low output current. A single-stage charge will only complete the Bulk phase portion of the charge curve. This method should return the battery to 90-95% SOC.

Refer to Electrical Specifications for charging parameters.

12.3.2 Absorption Charge

Absorption phase. The second phase of the charging process is Absorption Charge, also called the constant voltage phase. In this phase, the charger reduces current accordingly to maintain the desired voltage.

Refer to Electrical Specifications for charging parameters.

12.3.3 Equalization Charge

⚠ CAUTION
FIRE AND BURN HAZARD Do not perform an equalization charge on the Lithium Mobile battery. **Failure to follow these instructions may result in injury.**

Do not equalize charge the Lithium Mobile battery. Equalization charging is intended only for lead-acid batteries. An equalization charge is a purposeful overcharge that targets a voltage above the standard charge voltage to remove sulphate crystals that form on lead-acid plates over time.

12.3.4 Float Charge

Float phase. Float charge, the third phase of charging, is optional. During this stage, the battery is maintained at 100% SOC for extended periods, thereby counteracting self-discharge and parasitic loads.

- Not necessary. Float charging is not required.

If needed, refer to Electrical Specifications for float parameters.

13 ROUTINE INSPECTION

⚠ CAUTION

ELECTRIC SHOCK HAZARD

Do not touch the energized surfaces of any electrical component in the battery system.
Before servicing the battery, follow all procedures to fully de-energize the battery system.
Follow Safe Handling Procedures when working with the battery.

Failure to follow these instructions may result in injury.

Inspect the battery every six months:

1. Ensure that all DC cables are secure and fasteners are torqued properly.
2. Inspect and clean network and battery connectors of dirt and debris.
3. Ensure all networking cables and connectors are secure and tight.
4. Ensure that the installation location is clean and free from debris.
5. Inspect for cracks or bulging in the battery case.
6. Replace any damaged batteries.
7. Replace any damaged cables.

14 STORAGE

Leaving the battery connected to a trickle load or power electronics will cause the battery to discharge during storage. Without any load, the battery will self-discharge by approximately 3.5% per month while in storage. After storage, charge the battery to 100% SOC and perform at least one full discharge and charge cycle before returning the battery to service.

1. Store at 95% SOC or more. To store the battery for up to 6 months, store the battery at 95% SOC or more. It must remain disconnected from all loads and power electronics during storage.
2. Switch OFF the battery. Set the battery to OFF.
3. Check SOC every six months. Recharge the battery to above 95% SOC every six months.
4. Proper storage temperature. Ensure storage is within the temperatures specified below.

- 1 Month storage temperature -20°C to 55°C (-4°F to 131°F)
- 6 Month storage temperature -10°C to 30°C (14°F to 86°F)

NOTICE

VOID WARRANTY

Leaving the battery connected to a load or power electronics during storage may cause it to discharge, resulting in irreversible damage and voiding the warranty.

Storing the battery outside the specified temperature range will result in irreversible damage and void the warranty.

Failure to follow these instructions may result in equipment damage.

NOTICE

BATTERY DAMAGE

Storing or leaving the battery at 0% SOC will result in irreversible damage and void the warranty. If the battery is stored in a cold environment, it may become frozen and may not accept a
charge. Be aware of your battery's supported Charge Temperature range (refer to Environmental Specifications) and recharge before it approaches 0% SOC.

Allowing the battery to self-discharge below an open-circuit voltage of 3.0 VPC will cause irreversible damage and void the warranty.

Failure to follow these instructions may result in equipment damage.

15 BATTERY FIRMWARE AND DATA LOGS

Always ensure the battery is using the latest firmware. For instructions on updating the battery firmware, refer to Updating Battery Firmware.

Connect LYNK ACCESS software for 64-bit Windows 10 / 11 to either the LYNK II Communication Gateway (USB Type B connector) or to the Lithium Mobile battery's USB Type C port (see Battery Features, item #11) to update the battery firmware and to download data logs from the battery.

LYNK II Communication Gateway devices are available from Discover dealers and distributors. Get the latest LYNK ACCESS software and battery firmware from the Discover website at www.discoverbattery.com.

16 TROUBLESHOOTING

Accurate troubleshooting and warranty claims require data logs from each battery.

To share data logs LYNK ACCESS software for 64-bit Windows 10 / 11 is required to download data logs from each battery in the system:

- Connect to the LYNK II Communication Gateway through a USB connection with the LYNK II Communication Gateway device to download the data logs from all the batteries in the system.
- For systems without the LYNK II Communication Gateway device, connect to the USB Type-C port on the Lithium Mobile battery to download the data logs from that battery. If the system includes multiple batteries, download the data logs from each battery individually.

NOTE
Use the latest Lithium Mobile firmware to resolve all known issues. For instructions on updating the battery firmware, refer to Updating Battery Firmware.

17 RELATED INFORMATION

For warranty information, refer to 885-0098 Discover Lithium Mobile Battery Warranty Policy, available from the Discover website at www.discoverbattery.com.

18 GLOSSARY OF TERMS, ABBREVIATIONS, AND ACRONYMS

AFB Arc Flash Boundary	**LFP** LiFePO4 , Lithium Iron Phosphate
BMS Battery Management System	**RMS** Root Mean Square
DMM Digital Multimeter	**SOC** State of Charge
DOD Depth of Discharge	**VPC** Volts Per Cell
IBF Bolted Fault Current	

19 APPENDIX

- Lithium Mobile Commissioning Checklist
- Battery Startup Procedure
- Lithium Mobile Decommissioning Checklist
- Lithium Mobile Closed-Loop Communication - Supported Inverters

- How to Calculate Minimum Battery Sizing
- Megarevo Inverter
- Sol-Ark Inverter
- Solis Inverter
- Victron Inverter

19.1 Lithium Mobile Commissioning Checklist

Use this checklist to confirm the correct installation and function of the Lithium Mobile during the commissioning of the complete energy storage system. This checklist is only for the installation and operation of the Lithium Mobile . Further system-level functionality checks and tests must be performed once the full system is interconnected with the Lithium Mobile to complete commissioning.

Battery Installation

PROCEDURE	CHECK
1. Ensure that the battery is securely anchored to the Vertical mount Bracket. Verify that: All FOUR screws are tight The battery and Vertical mount Bracket are secure and the wall shows no signs of losing integrity.	

PROCEDURE	CHECK
2. Check the battery cable connections on the inverter. Verify that: The positive battery cables (RED) are fastened to the correct positive terminal on the inverter and secured using the torque as recommended by the inverter manufacturer. The negative battery cables (BLACK) are fastened to the correct negative terminal on the inverter and secured using the torque as recommended by the inverter manufacturer.	
3. Check the battery cables and connections to the battery. Verify that: The positive battery cables are connected to the correct positive battery terminals. The negative battery cables are connected to the correct negative battery terminals. Each battery terminal connection is latched in place. Note: You should not be able to pull off the connector without pressing the release button on the side of the connector.	

4. When closed-loop communication with the inverter is set up with Lithium Mobile batteries without the LYNK II Gateway, confirm its termination resistor is connected to COM2 on the last battery in the LYNK Network (even for 1 battery systems).	
5. If applicable, check the Conduit Box. Verify that: The conduit box, installed between the inverter and battery, is secure and not loose. The cables passing through the conduit box are not rubbing against any sharp edges. The cables are not overly bent or curled as a result of passing through grommets and conduit.	

PROCEDURE	CHECK
6. Equipment is bonded as required per the local installation code. Verify that: A suitable-sized bonding wire is connected from the ground terminal on the battery to a marked bonding terminal.	
7. Additional disconnects and overcurrent protection required by the installation code are installed and suitably rated. Verify that: Overcurrent protection is suitably rated for min 60 Vdc, 300 A per DC output. Disconnect is rated for min 60 Vdc, and for operating under load of 200 A per DC output.	

19.2 Battery Startup Procedure

PROCEDURE
1. Confirm the polarity of battery cables.
2. Confirm all the batteries are OFF.
3. Close the circuit breakers on all the batteries.
4. Close all loads on the DC bus, including the breaker for the battery connection on the inverter.

PROCEDURE
4. Turn on the batteries with their ON/OFF push buttons. Each battery goes through a load qualification process and a pre-charge process. If both processes complete successfully, the battery LED turns ON and the battery begins supplying power. If the LED flashes, either the battery failed to adequately precharge, or a load qualification error occurred. It may be necessary to turn batteries OFF/ON multiple times to successfully perform the pre-charge process for some inverters. If the LED continues to indicate a fault, use LYNK Access software to identify details about the fault.

19.3 Lithium Mobile Decommissioning Checklist

This checklist is only for the battery energy storage system; further system-level decommissioning procedures on the full system may be required. Refer to the manuals of connected DC loads, power conversion equipment,

Disassemble, Recycle, and Dispose

PROCEDURE	CHECK
1. Open disconnect devices to ensure there is no electrical connection to any externally connected Power Conversion Equipment.	
2. Turn off each battery one by one using the battery ON/OFF push buttons.	
3. Use a multimeter to verify there is no voltage on the battery terminals.	
4. Disconnect and remove battery cables from the inverter and batteries.	
5. Disconnect and remove CAT6 or higher communication cables.	

PROCEDURE	CHECK
6. If using conduit box: Disconnect and remove conduit. Remove cable glands and grommets. Remove the conduit box.	

7. Remove the screws holding the battery to the Vertical mount Adapter.	
8. Using a two or three-person lift or mechanical aid, detach the battery from the Vertical mount Adapter.	
9. Remove the Vertical mount fasteners and detach the Vertical mount Bracket.	
10. Recycle all recyclable components.	
11. Dispose of unrecyclable components following local waste disposal guidelines.	

19.4 Lithium Mobile Closed-Loop Communication - Supported Inverters

NOTE
If the inverter-charger you are connecting to the Lithium Mobile battery is not listed here, you may alternatively use the LYNK II Gateway for managed (closed-loop) communication. Otherwise, managed (closed-loop) communication may not be supported with your particular device. However, you can connect the inverter-charger to Lithium Mobile batteries in a self-managed (open-loop) configuration. Refer to How to Calculate Minimum Battery Sizing and calculate the minimum number of batteries required for your energy storage system. Depending on how the system is used, to optimize it, you may require more than the minimum number of batteries. Follow the instructions to set the inverter-charger to a self-managed (open-loop) configuration. Connect and operate the inverter-charger and Lithium Mobile batteries as described in this manual.

The Lithium Mobile battery supports closed-loop communication using two different methods:

1. Direct (without LYNK II Gateway) using the Pylon protocol.
2. LYNK II Gateway.

The following table identifies the closed-loop communication methods available to supported inverter-chargers.

Closed-Loop Communication with Inverters

Inverter	Closed Loop Without LYNK II (LV-BMS)		Closed Loop with LYNK II	LYNK ACCESS with LYNK II	LYNK CLOUD with LYNK II
	Straight Cable	Create Your Own Cable			
Schneider Electric (Legacy) Conext XW+ 5.5/6.8 Conext XW+ 7.0/8.5 Conext MPPT 60-150 Conext MPPT 80-600 Conext MPPT 100-600	No		Yes	Yes	Yes
Sol-Ark (Outdoor) 5K-1P, 6K-1P, 8K-1P, 10K-1P, 5K-2P, 8K-2P, 8K-2P-L, 12K-2P, 15K-2P, and 18K-2P (Outdoor)	Yes	No	Yes	Yes	Yes
Sol-Ark (Legacy) 8K - 12K Hybrid Indoor inverters	No	Yes	Yes	Yes	Yes
Solis S6-EH2P(9.6, 11.4, 12, 14, 16)K03-SV-YD-L-US split-phase low-voltage Hybrid Inverters	Yes	No	Yes	Yes	Yes
SUNSYNK 3K - 16K single-phase and 8K - 12K three-phase low-voltage Hybrid Inverters	Yes	No	Yes	Yes	Yes
Victron Energy Color Control GX Venus GX VE.CAN Devices	No	Yes	Yes	Yes	Yes

19.4.1 Cables for Closed-Loop Communication Without LYNK II

The communication cable between the Lithium Mobile battery and the connected inverter-charger can differ depending on the pin outs used for CAN communication by the inverter-charger.

The following identifies the cable requirements for inverter-chargers the Lithium Mobile battery supports for closed-loop communication without using the LYNK II Communication Gateway.

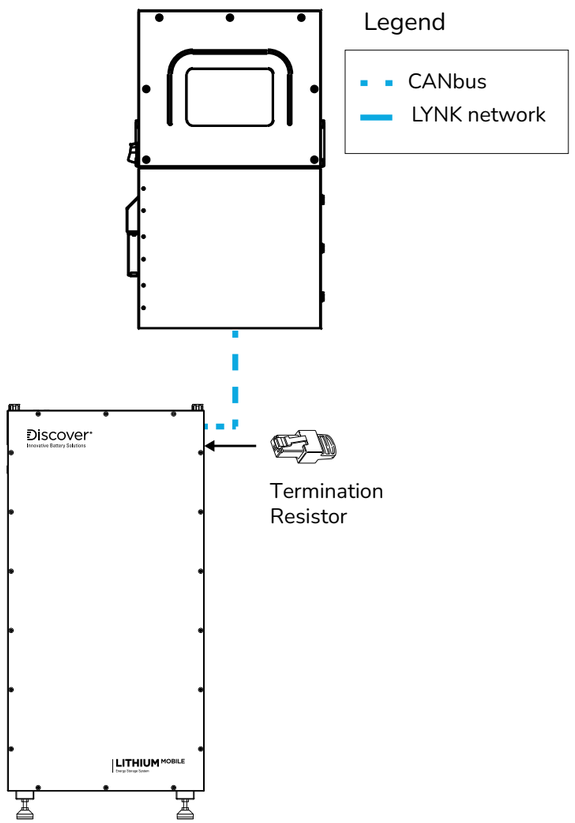

Closed-Loop Communication Without LYNK II

19.4.1.1 Straight Cable

The Lithium Mobile supports closed-loop communication with the following inverters through a CAT6 or higher cable. Refer to Lithium Mobile Closed-Loop Communication - Supported Inverters.

- Megarevo R12KLNA, R16KLNA Hybrid Inverters
- Sol-Ark 5K-1P, 6K-1P, 8K-1P, 10K-1P, 5K-2P, 8K-2P, 8K-2P-L, 12K-2P, 15K-2P, and 18K-2P (Outdoor)
- Solis S6-EH2P9.6K03-SV-YD-L-US, S6-EH2P11.4K03-SV-YD-L-US, S6-EH2P12K03-SV-YD-L-US, S6-
- EH2P14K03-SV-YD-L-US, S6-EH2P16K03-SV-YD-L-US split-phase low-voltage Hybrid Inverters

Connect the CAT6 or higher cable from the battery's COM2 port directly to the Battery CAN port on the inverter.

NOTICE
EQUIPMENT DAMAGE Use a straight-through cable. Do not use a cross-over cable. Isolate unused pins. Crossing pin functions may cause system damage. Do not terminate unused wires to ground, power, or other functions. Mixing this communication line with the LYNK Network may result in equipment malfunction and damage. **Failure to follow these instructions may result in equipment damage.**

19.4.1.2 Create Your Own Cable

The Lithium Mobile supports closed-loop communication with the following inverter-chargers through a modified CAT6 or higher cable. For the list of inverter-chargers that require you to create your own cable, refer to Lithium Mobile Closed-Loop Communication - Supported Inverters.

Victron Energy

- Victron Energy Color Control GX, Venus GX, VE.CAN Devices

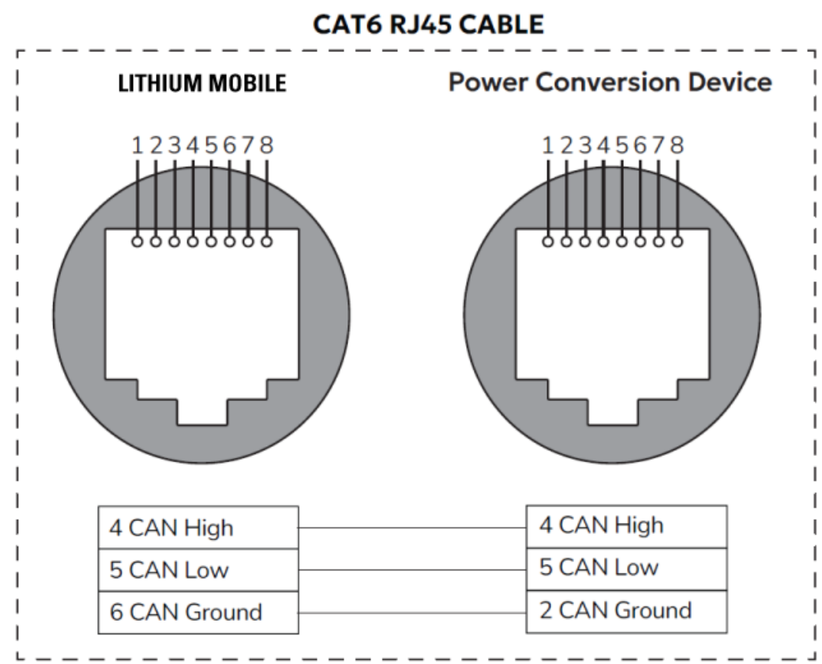

Create Your Own Cable (Victron Energy)

Legacy Sol-Ark

- (Legacy) Sol-Ark 8K - 12K Hybrid Indoor inverters

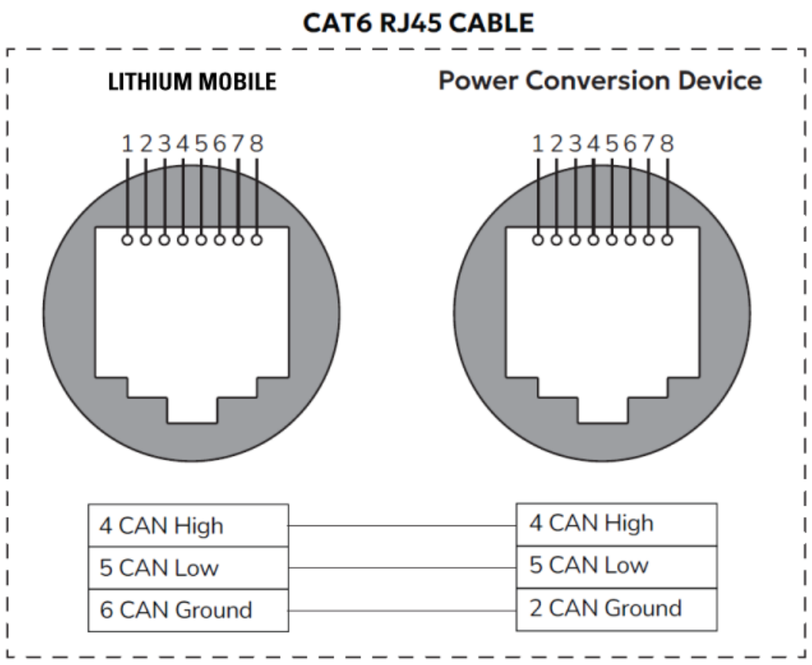

Create Your Own Cable (Legacy Sol-Ark)

19.5 How to Calculate Minimum Battery Sizing

The following table identifies the recommended number of batteries required for inverter-chargers with the shown inverter Peak, Discharge, and Charge values. Using these values with the battery sizing information provided in the *Lithium Mobile DC Capacity Values for Sample Battery Systems* table in the Minimum Specifications for Battery Systems topic. Identify the recommended number of Lithium Mobile batteries in the last column.

Example Battery Sizing for example inverters

Model	Inverter Peak	Max Continuous Discharge	Max Continuous Charge	Lithium Mobile recommended per inverter
Lithium Mobile Battery	*300 A*	*200 A*	*200 A*	—
Inverter A	200 A	50 ADC	50 ADC	1
Inverter B	300 A	100 ADC	100 ADC	1
Inverter C	400 A	150 ADC	150 ADC	2
Inverter D	500 A	200 ADC	200 ADC	2
Inverter E	600 A	250 ADC	250 ADC	2
Inverter F	700 A	300 ADC	300 ADC	3

19.5.1 Calculating the recommended number of batteries per inverter

To determine the recommended number of batteries needed for optimal inverter performance, the battery's peak current, maximum continuous discharge current, and maximum continuous charge current should exceed the corresponding performance values of the inverter.

Inverter A: The Lithium Mobile battery's peak and discharge and charge currents are greater than the corresponding performance values of the inverter.

- One battery is recommended.

Inverter B: The Lithium Mobile battery's peak and discharge and charge currents are greater than or equal to the corresponding performance values of the inverter.

- One battery is recommended.

Inverter C: The Lithium Mobile battery's peak is less than the inverter, even though the battery's discharge and charge currents are greater than the corresponding currents of the inverter.

If we use two batteries, the total peak current of the batteries is greater than the peak current of the inverter.

- Two batteries are recommended.

Inverter D: The Lithium Mobile battery's peak is less than the inverter, even though the battery's discharge and charge currents are equal to the corresponding currents of the inverter.

If we use two batteries, the total peak current of the batteries is greater than the peak current of the inverter.

- Two batteries are recommended.

Inverter E: The Lithium Mobile battery's peak and discharge and charge currents are less than the inverter.

If we use two batteries, the total peak and discharge and charge currents of the batteries are greater than the corresponding performance values of the inverter.

- Two batteries are recommended.

Inverter F: The Lithium Mobile battery's peak and discharge and charge currents are less than the corresponding performance values of the inverter.

If we use two batteries, even though the total discharge and charge current of the batteries is greater than the corresponding currents of the inverter, the total peak current of the batteries is less than the peak current of the inverter.

If we use three batteries, the total peak current of the batteries is greater than the peak current of the inverter.

- Three batteries are recommended.

NOTICE
EQUIPMENT DAMAGE The internal busbars of the Lithium Mobile are rated to a maximum 400 A. Design your system so the batteries are not subjected to current beyond this limit. **Failure to follow these instructions may result in equipment damage.**

19.5.2 Calculating Inverter Peak Current

If the inverter manufacturer provides the surge power only, calculate the peak current using the following formula:

Inverter Peak (Amps) = (Inverter Surge Value) / (Inverter Efficiency %) / (48V: Low Battery Cut-Off)

For example, if the inverter's surge power is 24,000 watts and its CEC efficiency is 95%, the calculation is:

- Inverter Peak = 24,000 watts / 0.95 / 48 V

This results in a peak current of approximately 526 A.

To maximize inverter performance, two batteries (with a combined peak current of 600A) are recommended to support the inverter's peak current of 526 A. If the two batteries can also handle the maximum continuous charge and discharge currents, they can manage the inverter's charging and discharging needs.

19.6 Sol-Ark Inverter Configuration (Closed Loop Without LYNK II)

The Lithium Mobile supports closed-loop communication with the Sol-Ark inverters listed in the Closed-Loop Communication with Inverters table in the Lithium Mobile Closed-Loop Communication topic.
To enable communication between the inverter and batteries:

1. When setting up closed-loop communication with:
    - 5K-1P, 6K-1P, 8K-1P, 10K-1P, 5K-2P, 8K-2P, 8K-2P-L, 12K-2P, 15K-2P, and 18K-2P outdoor inverters, connect a CAT6 or higher straight cable from the Lithium Mobile COM2 port to the CAN port of the Sol-Ark inverter-charger.

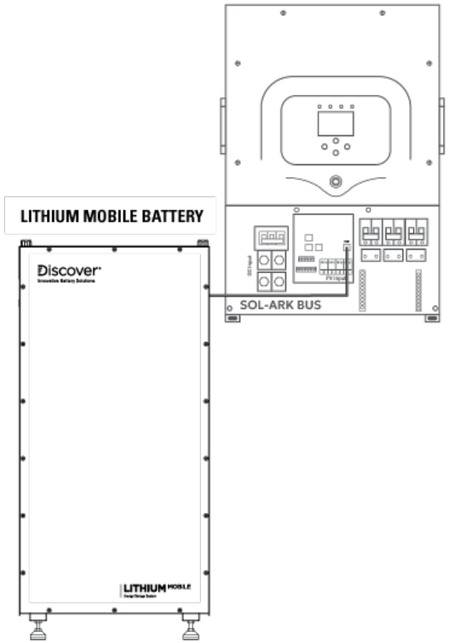

Sol-Ark Outdoor 5K-1P / 5K-2P / 8K-P2 / 12K-P2 / 15K-P2 / 18K-P2

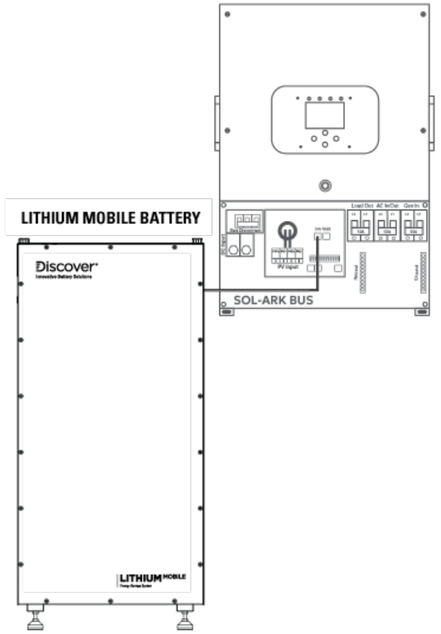

(Legacy) Indoor Sol-Ark 12K Hybrid

- Legacy) 8K to 12K Hybrid Indoor inverters, create your own cable as identified in Cables for Closed-Loop Communication Without LYNK II - Legacy Sol-Ark, and connect the cable from the Lithium Mobile COM2 port to the CAN port of the Sol-Ark inverter-charger.

2. Configure the inverter-charger.
   a. Using the touch screen and keypad on the inverter-charger, navigate to System Setup > Batt Setup.
   b. Specify the settings according to the instructions in the tables that follow to stop power conversion when a closed-loop communication error occurs.
   c. Touch the Up and Down arrows to scroll through the screens. Touch the checkmark button to save changes.
3. Exit and restart the inverter-charger.
-

NOTE
If there is a break in communication between the Lithium Mobile battery and inverter-charger for more than ten seconds, the inverter-charger will safely stop operation, so long as the **BMS Lithium Batt** and the **BMS_Err_Stop** parameters are both enabled on the Sol-Ark inverter-charger. The inverter-charger will display an **F58 BMS Communication Fault** if communication is lost. The Sol-Ark inverter-charger will check every five minutes and resume closed-loop operation if communication is re-established. If communication cannot be reestablished and you need to resume operation, you may have to manually convert the Sol-Ark inverter to an open-loop configuration. For instructions on configuring open loop, refer to Sol-Ark Inverter Configuration (Open Loop). It is recommended that the Sol-Ark inverter be programmed with the appropriate open-loop settings before enabling closed-loop communication.

NOTE
Depending on your system and particular use case, there may be other settings that require configuration. Refer to the inverter manual for information on these settings.

System Setup > Batt Setup > Batt

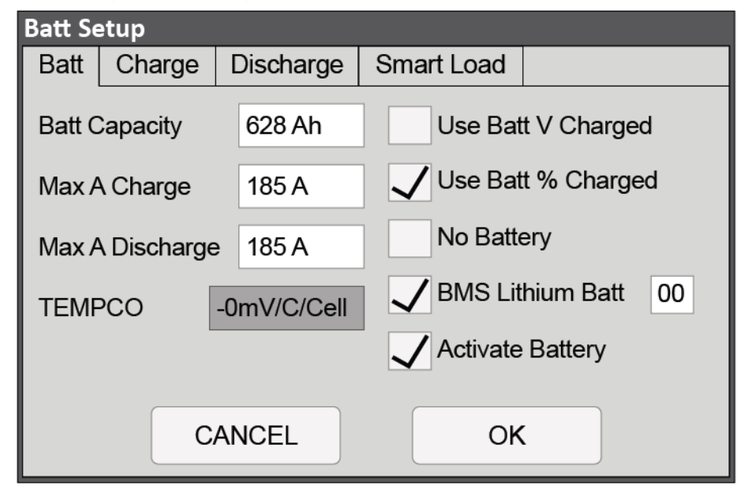

Battery Setting - Sol-Ark Closed-loop Charge Settings

Batt Setup > Batt	
Batt Capacity	Set to the number of Discover Lithium batteries x Ah capacity of each. For example, set to 628 Ah for two Lithium Mobile DLM-16000-48 batteries, each rated 314 Ah capacity.

Max A Charge	For a single inverter, set to the lesser of the inverter's maximum charge rate or the quantity of attached batteries multiplied by the battery's maximum charge rating. For example: Single phase system with 12K-2P-N inverter and two Lithium Mobile DLM-16000-48 batteries Set the 12K-2P-N inverter to the lessor of the inverter's maximum charge rate of 185 A, or 380 A for two Lithium Mobile DLM-16000-48 batteries. (1) NOTE: Each Lithium Mobile battery is rated at a 200 A charge rate, but when connected in parallel, the maximum current is limited by internal busbars. For the recommended maximum current for paralleled Lithium Mobile, refer to Minimum Specifications for Battery Systems. Three-phase system with three Sol-Ark 15K-2P-N inverters and two Lithium Mobile DLM-16000-48 batteries For a three phase system set to the lessor value between the master inverter's maximum charge rate or the master inverter, or the quantity of attached batteries multiplied by the battery's maximum charge rating divided by the number of inverters. For example, set the 12K-2P-N inverter to the lessor of the inverter's maximum charge rate of 185 A, or 133 A for two Lithium Mobile DLM-16000-48 batteries that are each rated at a maximum charge of 200 A, and then divided by three inverters (2 x 200 A ÷ 3 = 133.33 A).

Batt Setup > Batt	
Max A Discharge	For a single inverter, set to the lesser value between the inverter's maximum discharge rate or the quantity of attached batteries multiplied by the battery's maximum discharge rating. For example, set the 12K-2P-N inverter to the lesser of the inverter's maximum discharge rate of 185 A, or 380 A for two Lithium Mobile DLM-16000-48 batteries. NOTE: Each Lithium Mobile battery is rated at a 200 A discharge rate, but when connected in parallel, the maximum current is limited by internal busbars. For the recommended maximum current for paralleled Lithium Mobile, refer to Minimum Specifications for Battery Systems. For a three-phase system, set to the lesser value between the master inverter's maximum discharge rate or the quantity of attached batteries multiplied by the battery's maximum discharge rating divided by the number of inverters. For example, set the 12K-2P-N inverter to the lesser of the inverter's maximum discharge rate of 185 A, or 133 A for two Lithium Mobile DLM-16000-48 batteries that are each rated at a maximum discharge rate of 200 A and then divided by 3 inverters (2 x 200 A ÷ 3 = 133.33 A).
TEMPCO	This field is disabled when the BMS Lithium Batt check box is selected.
Use Batt V Charged	Disable
Use Batt % Charged	Enable
BMS Lithium Batt	Enable and set the value to 00. (2)
Activate Battery	Enable

The recommended value for Max A Charge is 75% of the rated maximum charge current for the battery.

(1) Selecting the BMS Lithium Batt check box confirms closed-loop operation. The value 00 specifies the CANBus Battery mode (Pylon).

- **System Setup > Batt Setup > Charge**

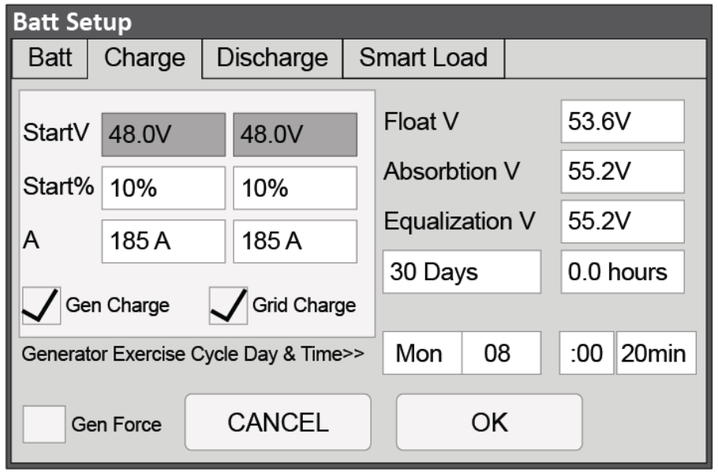

Battery Setting - Sol-Ark Closed-Loop Charge Settings

Batt Setup > Charge	
StartV	Unavailable (Grey) in a closed-loop configuration.
Start%	Set to user preference based on battery State-Of-Charge as a percentage. The recommended minimum is 10%.

System Setup > Batt Setup > Discharge

System Setup > Batt Setup > Discharge

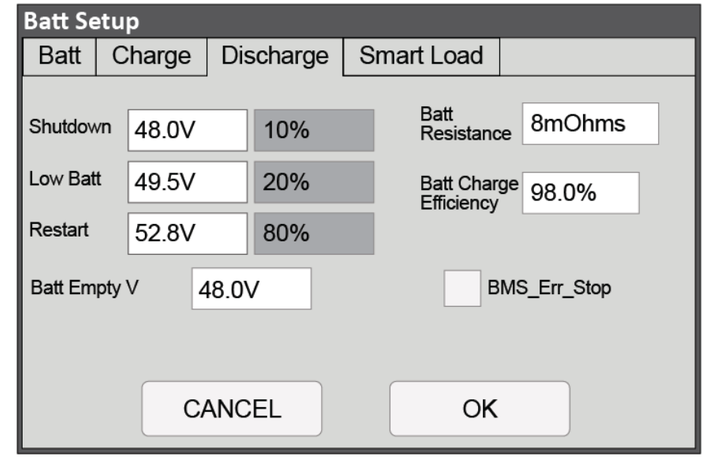

Advanced Function - Sol-Ark Closed-Loop Setting

Batt Setup > Discharge	
Shutdown	Adjust values to support the use case or keep the original values. (1)
Low Batt	
Restart	
Batt Empty V	48.0V
Batt Resistance	Set to: 10 mOhm divided by the number of batteries (plus the mOhm value for cable resistance, if known). (2)
Batt Charge Efficiency	98%
BMS_Err_Stop	Selecting this check box is recommended. A check mark causes the inverter-charger to stop operating if there is a communication error with the battery BMS.

(1) A closed-loop configuration uses % state-of-charge. Voltage values are not configurable.

(2) This value should include cable and connection resistance. The formula provided is to help calculate a general value.

(3) BMS_Err_Stop MUST be enabled to cause the inverter to stop operating if there is a communication error. If BMS_Err_Stop is disabled, the inverter will continue to operate using the

last communicated battery values.

19.6.1 Sol-Ark Inverter Configuration (Open Loop)

If closed-loop communication cannot be established and you need to resume operation, you may have to convert the Sol-Ark inverter to an open-loop configuration manually. Refer to the latest Discover Battery documentation for battery values and the latest Sol-Ark documentation for menu navigation and details on the setup procedure.

NOTE
It is recommended that the Sol-Ark inverter be programmed with the appropriate open-loop settings before enabling closed-loop communication. Depending on your system and particular use case, there may be other settings that require configuration. Refer to the inverter manual for information on these settings.

Set the Discover Lithium batteries to ON and set the inverter-charger to ON.

1. Using the touch screen and keypad on the inverter, navigate to **System Setup > Battery Setup**.
2. Specify the battery settings according to the instructions in the tables that follow. Touch the Up and Down arrows to scroll through screens.
3. Touch the check mark button to save changes.
4. Exit and restart the inverter-charger.

•

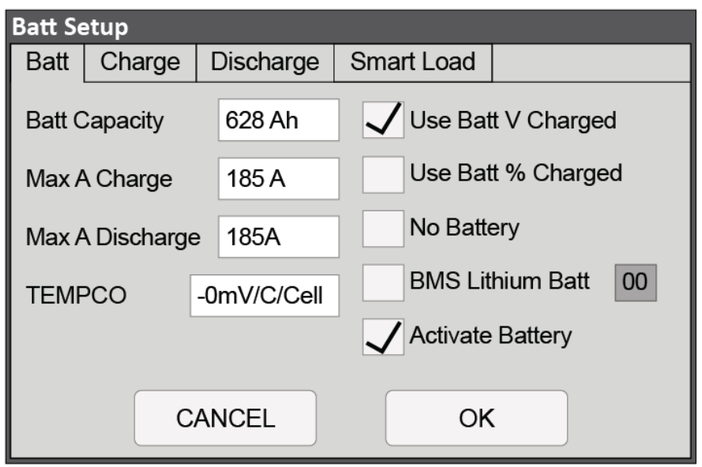

Open Loop: System Setup > Battery Setup > Batt

Battery Setting - Sol-Ark Open-Loop Charge Settings

Batt Setup > Batt	
Batt Capacity	Set to the number of Discover Lithium batteries x Ah capacity of each. For example, set to 628 Ah for two Lithium Mobile DLM-16000-48 batteries, each rated 314 Ah capacity.

Batt Setup > Batt	
Max A Charge	For a single inverter, set to the lesser of the inverter's maximum charge rate or the quantity of attached batteries multiplied by the battery's maximum charge rating. For example: Single phase system with 12K-2P-N inverter and two Lithium Mobile DLM-16000-48 batteries Set the 12K-2P-N inverter to the lessor of the inverter's maximum charge rate of 185 A, or 380 A for two Lithium Mobile DLM-16000-48 batteries. (1) NOTE: Each Lithium Mobile battery is rated at a 200 A charge rate, but when connected in parallel, the maximum current is limited by internal busbars. For the recommended maximum current for paralleled Lithium Mobile, refer to the table in the Minimum Specifications for Battery Systems topic. Three-phase system with three Sol-Ark 15K-2P-N inverters and two Lithium Mobile DLM-16000-48 batteries For a three-phase system set to the lessor value between the master inverter's maximum charge rate or the master inverter, or the quantity of attached batteries multiplied by the battery's maximum charge rating divided by the number of inverters. For example, set the 12K-2P-N inverter to the lessor of the inverter's maximum charge rate of 185 A, or 133 A for two Lithium Mobile DLM-16000-48 batteries that are each rated at a maximum charge of 200 A, and then divided by three inverters (2 x 200 A ÷ 3 = 133.33 A).

Batt Setup > Batt	
Max A Discharge	For a single inverter, set to the lesser value between the inverter's maximum discharge rate or the quantity of attached batteries multiplied by the battery's maximum discharge rating. For example, set the 12K-2P-N inverter to the lesser of the inverter's maximum discharge rate of 185 A, or 380 A for two Lithium Mobile DLM-16000-48 batteries. NOTE: Each Lithium Mobile battery is rated at a 200 A discharge rate, but when connected in parallel, the maximum current is limited by internal busbars. For the recommended maximum current for paralleled Lithium Mobile, refer to the table in the Minimum Specifications for Battery Systems topic. For a three-phase system, set to the lesser value between the master inverter's maximum discharge rate or the quantity of attached batteries multiplied by the battery's maximum discharge rating divided by the number of inverters. For example, set the 12K-2P-N inverter to the lesser of the inverter's maximum discharge rate of 185 A, or 133 A for two Lithium Mobile DLM-16000-48 batteries that are each rated at a maximum discharge rate of 200 A and then divided by 3 inverters (2 x 200 A ÷ 3 = 133.33 A).
TEMPCO	Set to 0 mv/C/Cell. Discover Lithium batteries do not require temperature compensation.
Use Batt V Charged	Enable
Use Batt % Charged	Disable
BMS Lithium Batt	Disable
Activate Battery	Enable

Open Loop: System Setup > Battery Setup > Charge

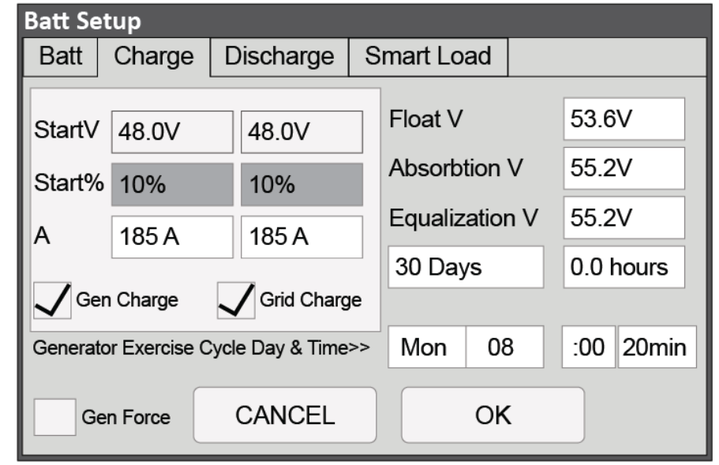

Battery Setting - Sol-Ark Open-loop Battery Settings

Batt Setup > Charge	
StartV	Set to user preference based on battery voltage. The recommended minimum is 48 V.
Start%	Unavailable (Grey) in an open-loop configuration.
Float V	53.6 V
Absorption V	55.2 V
Equalization V	Do not equalize Discover Lithium batteries.
Equalization Days	
Equalization Hours	

Open Loop: System Setup > Battery Setup > Discharge

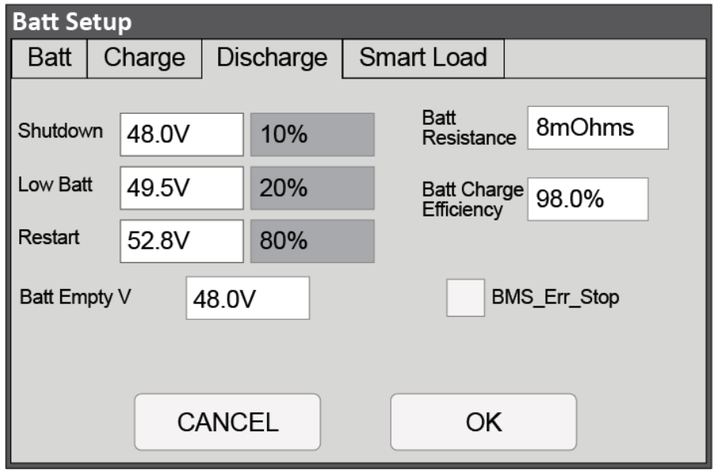

Battery Setting - Sol-Ark Open-loop Battery Settings

Batt Setup > Discharge	
Shutdown	Adjust values to support the use case or keep the original values.
Low Batt	
Restart	
Batt Empty V	48 V
Batt Resistance	Set to: 10 mOhm divided by the number of batteries (plus the mOhm value for cable resistance, if known).
Batt Charge Efficiency	98%
BMS_Err_Stop	Clear this check box in an open-loop configuration.

NOTE

For more information about configuring the Sol-Ark inverter-charger, refer to product documentation on Sol-Ark website (sol-ark.com) or the LYNK II Installation and User Manual (805-0033).

19.7 Solis Inverter Configuration (Closed Loop Without LYNK II)

The Lithium Mobile supports closed-loop communication with the Solis inverters listed in the Closed-Loop Communication with Inverters table in the Lithium Mobile Closed-Loop Communication topic.

If necessary, first configure the Solis inverter-chargers to operate in parallel by establishing the inverter-charger master/slave relationships and phase assignments before setting the battery operation parameters. Confirm each inverter-charger operates normally, one by one, before initiating full system operation.

NOTE
When the Solis inverter is configured in a closed loop with Discover Lithium batteries and the communication breaks between the batteries and inverter, after a few minutes, the inverter safely stops operation and displays an alarm. If communication is re-established, the Solis inverter resumes closed-loop operation within seconds. If communication cannot be reestablished and you need to resume operation, you may have to manually convert the Solis inverter to an open-loop configuration. For instructions on configuring open loop, refer to Solis Inverter Configuration (Open Loop).

To enable communication between the inverter and batteries:

1. Connect a CAT6 or higher straight cable from the Lithium Mobile COM2 port to the BMS port of the Solis inverter-charger.

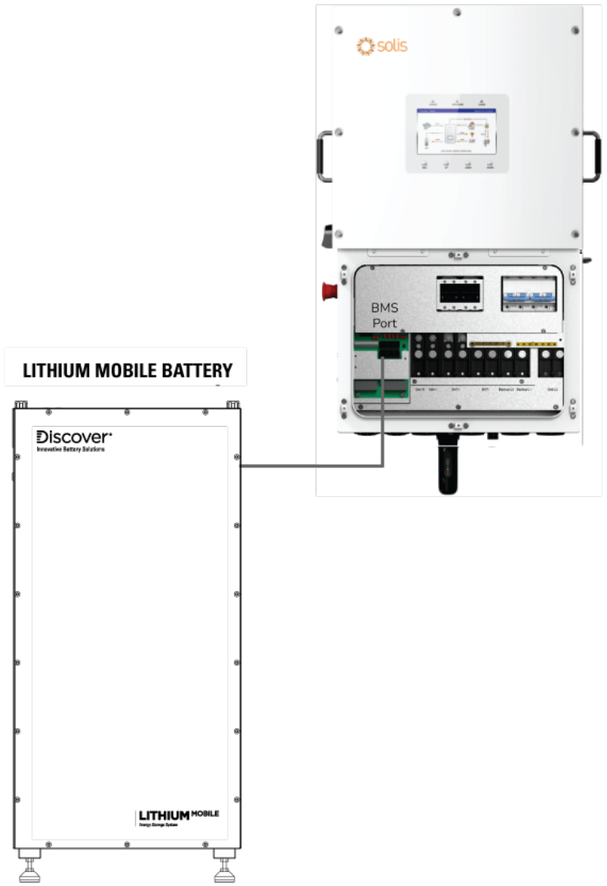

Solis BMS Connection

2. Set the Discover Lithium batteries to ON and set the inverter to ON.
3. Configure the Inverter-Charger.
   Install the Solis Cloud app to connect your phone to the Solis inverter-charger.
4. Turn on Bluetooth on your phone and open the SolisCloud app.

SolisCloud app

5. Tap **Service > Local Debugging > Connect with Bluetooth**.
6. Upgrade the firmware on all paralleled Solis inverter-chargers.
   a. In the bottom menu bar, select **Setting > Device Upgrade**.
   b. Upgrade the **HMI** and **DSP**.

NOTE
All Solis inverters must be use the same firmware version to operate normally.

After upgrading the firmware, in the phone app tap **Quick Setting**.

1. In the Battery page, set the following then tap **Next Step**.
   - Battery Type = Lithium Battery
   - Battery Model = Lithium battery LV (Pylon)
   -

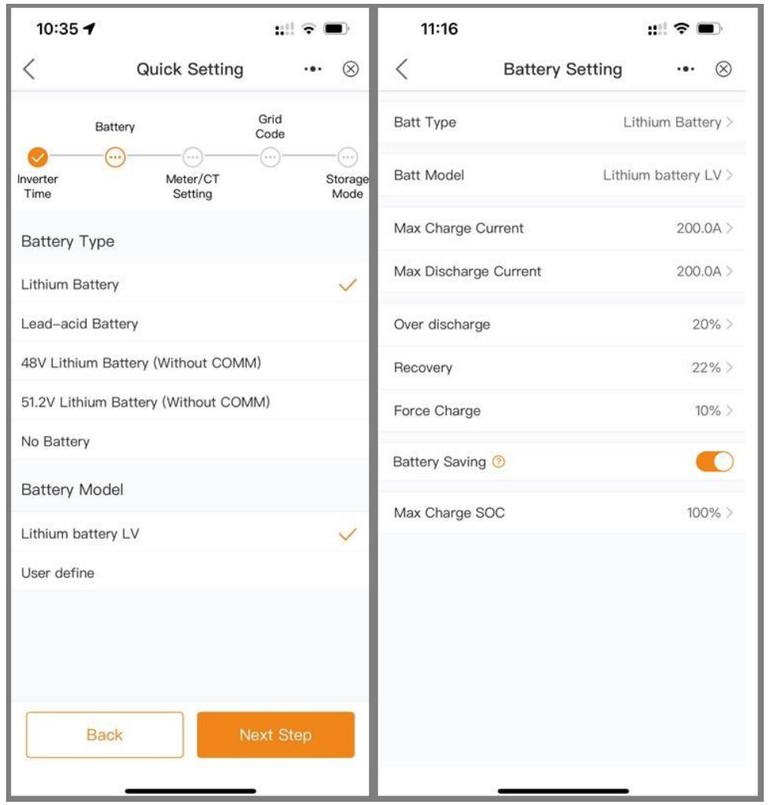

Lithium Battery Setting

9. Set other inverter-charger settings as required by your system.
   For instructions on configuring inverter-charger settings, refer to the Solis manual.
10. After all the settings have been configured, check the overview of the system.
    - Follow all manufacturer instructions to power up the inverter DC switch, and turn ON the batteries and other peripheral equipment.
    - Use the overview to confirm the battery SOC, battery communications, grid, and load.
    - Review and resolve any generated alarms.

At this point, if the system is grid-connected, AC grid power is turned on.

11. Exit the app once the system is running and all checks are complete.
    •

NOTE
Depending on your system and particular use case, there may be other settings that require configuration. Refer to the inverter manual for information on these settings.

19.7.1 Solis Inverter Configuration (Open Loop)

If closed-loop communication cannot be established and you need to resume operation, you may have to manually convert the Solis inverter-charger to an open-loop configuration. Refer to the latest Discover Lithium battery documentation for battery values and the latest Solis documentation for details on menu navigation and the setup procedure.

NOTE
Depending on your system and particular use case, there may be other settings that require configuration. Refer to the inverter manual for information on these settings.

Set the Discover Lithium batteries to ON and set the inverter to ON.

1. From the Solis Cloud app, tap **Setting > Battery**, and set the following.
   •

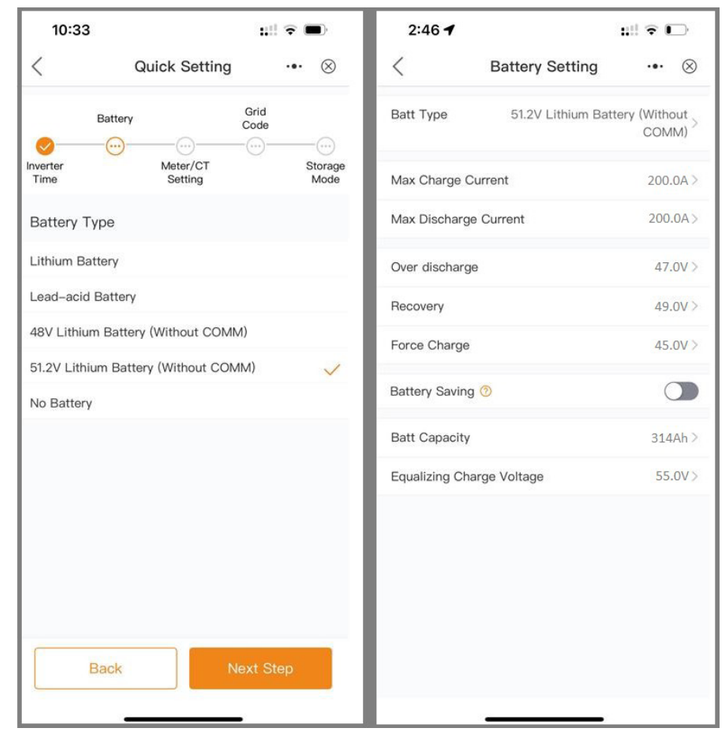

Solis Open-Loop Configuration

The Solis inverter will operate in an open-loop configuration when selecting a Battery Type without communication (“Without COMM”).

Setting	Description
Battery Type	51.2V Lithium Battery (Without COMM)
Max Charge Current	Number of batteries x 200 A NOTE: Each Lithium Mobile battery is rated at a 200 A discharge rate, but when connected in parallel, the maximum current is limited by internal busbars. For the recommended maximum current for paralleled Lithium Mobile, refer to the table in the Minimum Specifications for Battery Systems topic.
Max Discharge Current	

Setting	Description
Over discharge (1)	47.0 V
Recovery (1)	49.0 V
Force Charge (1)	45.0 V
Battery Saving (1)	Disable
Batt Capacity	Number of batteries x 314 Ah
Equalizing Charge Voltage	55.2 V

(1) Adjust the battery's Over Discharge, Recovery, Force Charge, and Battery Saving parameters as required by your use case.

NOTE
For more information about configuring the Solis-inverter-charger, refer to product documentation on the Solis website (solisinverters.com) or the LYNK II Solis User Manual (805-0080).

19.8 Victron Inverter Configuration (Closed Loop Without LYNK II)

The Lithium Mobile supports closed-loop communication with the Victron inverters listed in the Closed-Loop Communication with Inverters table in the Lithium Mobile Closed-Loop Communication topic.

To enable communication between the inverter and batteries:

1. Connect a CAT6 or higher modified cable (refer to Cables for Closed-Loop

Communication Without LYNK II - Victron Energy) from the Lithium Mobile COM2 port to the CAN port of the Victron GX device.

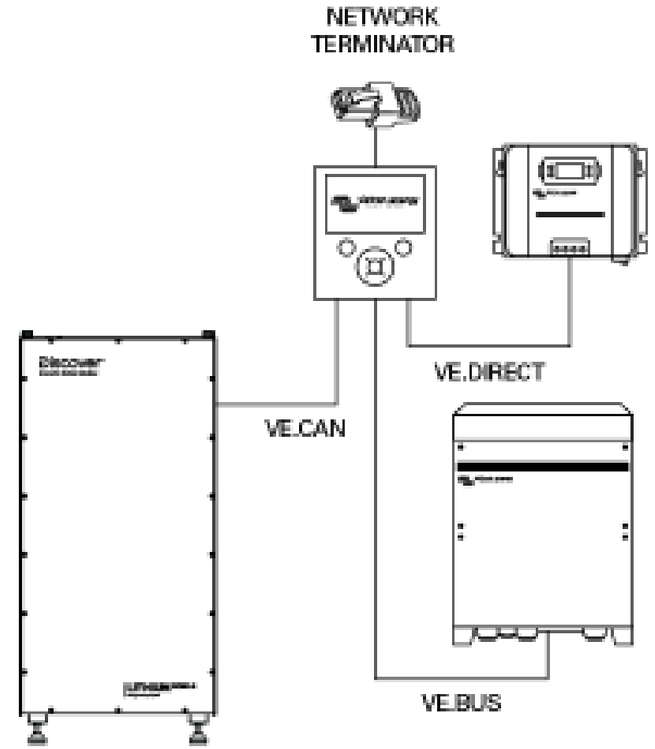

Victron CAN Connection

2. Using a touch screen or other user interface of the GX device, set the VE.Can port and CAN-Bus BMS communication rate to 500 kbit/s to match the communication speed on the Lithium Mobile battery.
3. **Device List > Settings > Services > VE.Can port > CAN-bus profile**
   a. Select **CAN-bus BMS (500 kbit/s)** (Pylon)
4. Return to the Device List, and the Discover Lithium Battery should now appear as one of the devices.
5. During normal operation, the battery's charge parameter limits are set by the BMS and communicated by the Victron GX device to the inverter-charger and MPPT.

To optimize the performance of a Victron system, manually set the following DVCC menu items using the Victron GX device, and reboot the system.

If communication is interrupted between the BMS and Victron inverter-charger, the Victron inverter-charger stops charging until communication is re-established.

Victron Closed-loop Configuration Procedure

Refer to the latest Discover Battery documentation for battery values and the latest Victron documentation for menu navigation and details on the setup procedure.

1. Using a touch screen or other user interface of the GX device, set the VE.Can port and CAN-Bus BMS communication rate to 500 kbit/s to match the communication speed of the CAN port on the Lithium Mobile battery.

   Device List > Settings > Services > VE.Can port > CAN-bus profile

   Select **CAN-bus BMS 500 kbit/s**.

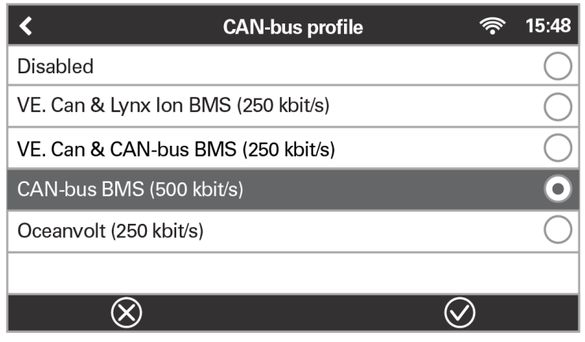

Victron CAN-bus Profile

Return to the Device List, and the Discover Lithium Battery should now appear as one of the devices.

Device List

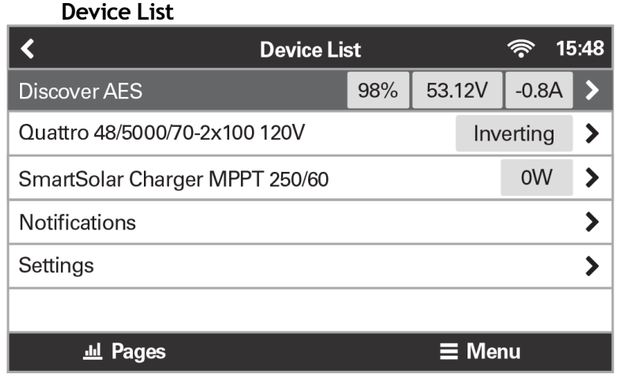

Victron Device List

NOTE

If Discover does not appear on the Device List:

Confirm that the CAT6 or higher communication cable's communication lines are configured properly (refer to Cables for Closed-Loop Communication Without LYNK II - Victron Energy). Check the RJ45 connector for bad crimps or other connection issues.

3. To confirm that all batteries in the network are communicating with the Victron system, review the actual battery parameters. If multiple batteries are connected, a single entry shows the total limit of all the batteries.

   Device List > Discover AES > Parameters

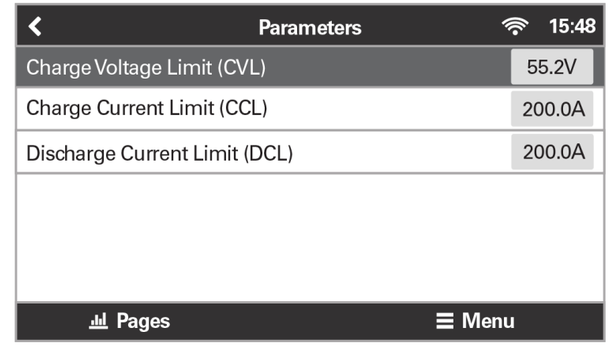

Victron Battery Parameters

Configurable Closed-Loop Settings

During normal operation, the battery's charge parameter limits are set by the BMS and communicated
by the Victron GX device to the inverter-charger and MPPT.

To optimize the performance of a Victron system, manually set the following DVCC menu items using the Victron GX device and reboot the system.

Device List > Settings > DVCC

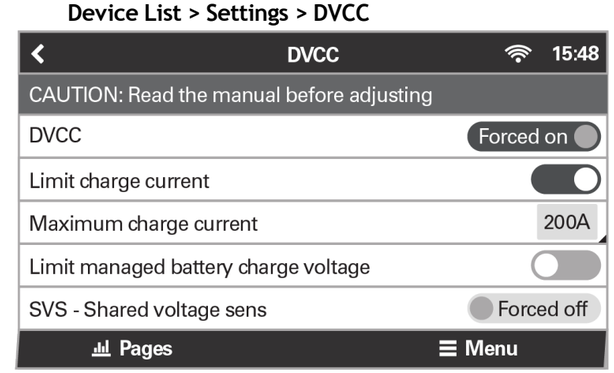

Victron DVCC Menus 1/2

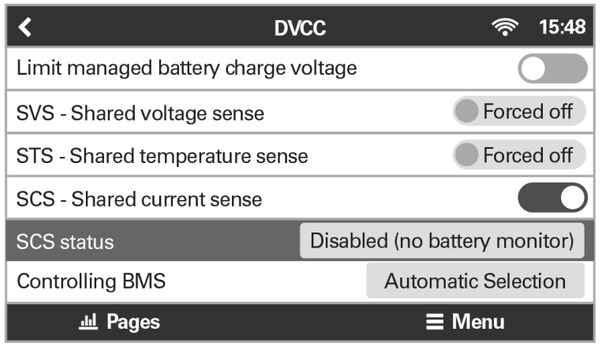

Victron DVCC Menus 2/2

DVCC Menu	Setting
DVCC (Distributed Voltage and Current Control)	Forced on
Limit charge current	ON (1)
Maximum charge current	Installed number of Lithium Mobile batteries x 200 A, or a lower value if system curtailment is required. NOTE: Each Lithium Mobile battery is rated at a 200 A discharge rate, but when connected in parallel, the maximum current is limited by internal busbars. For the recommended maximum current for paralleled Lithium Mobile, refer to Minimum Specifications for Battery Systems.
Limit managed battery charge voltage	Disable
SVS - Shared voltage sense	Forced off (2)
STS - Shared temperature sense	Forced off
SCS - Shared current sense	ON

SCS status	(Displays the current status)
Controlling BMS	Automatic Selection

Limit charge current works across the whole system. MPPTs are automatically prioritized over the mains. When the BMS requests a maximum charge current that differs from the user-configurable setting, it uses the lesser of the two.

•

(1) SVS should be set to OFF. Victron support has reported instances of conflicts when SVS is set to ON with a Lithium BMS.

Saving the Configurable Closed-Loop Settings

After all DVCC menu items have been set, reboot the system to complete the closed-loop configuration.

Device List > Settings > General > Reboot?

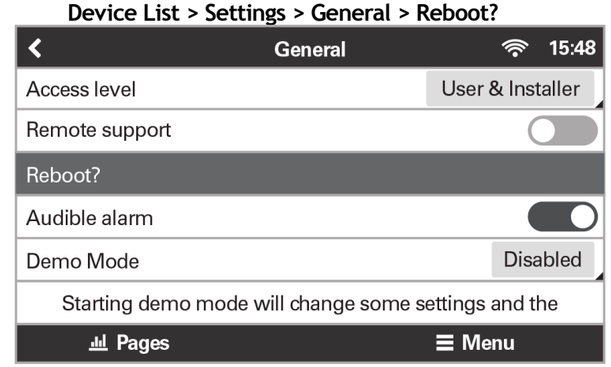

Victron Rebooting the System

NOTE
To avoid conflicting network information and data, do not use a Victron BMV battery monitor when using the LYNK II Communication Gateway.

19.8.1 Victron Inverter Configuration (Open Loop)

Whenever possible, using a closed-loop configuration is recommended with Discover batteries and Victron devices. However, using an open-loop configuration may be required if the closed-loop communication system encounters an issue.

If there is a break in communication between the Victron Energy device and the battery, the Victron device stops charging. Charging only resumes after communication between the Victron device and the Lithium Mobile battery is restored. If communication cannot be restored, you may have to set the system to open loop until an installation professional is available.

As a precautionary measure, it is recommended to program the inverter-charger with the correct voltage-based parameters before setting up the system to operate in a closed-loop configuration. If

closed-loop communication fails, after the open loop parameters have been configured, turn the

Victron device OFF and ON with the On/Off/Charger Only switch to enable the open-loop settings.

The following describes how to set up open loop on Victron devices.

Setting up Open Loop on Victron Devices

You will need the latest firmware on all connected devices. The following presumes familiarity with VE Configure software. After setting the voltage-based open-loop parameters using the VE Configure 3 software, **send** all parameters to the inverter-charger and GX device and then restart the GX device.

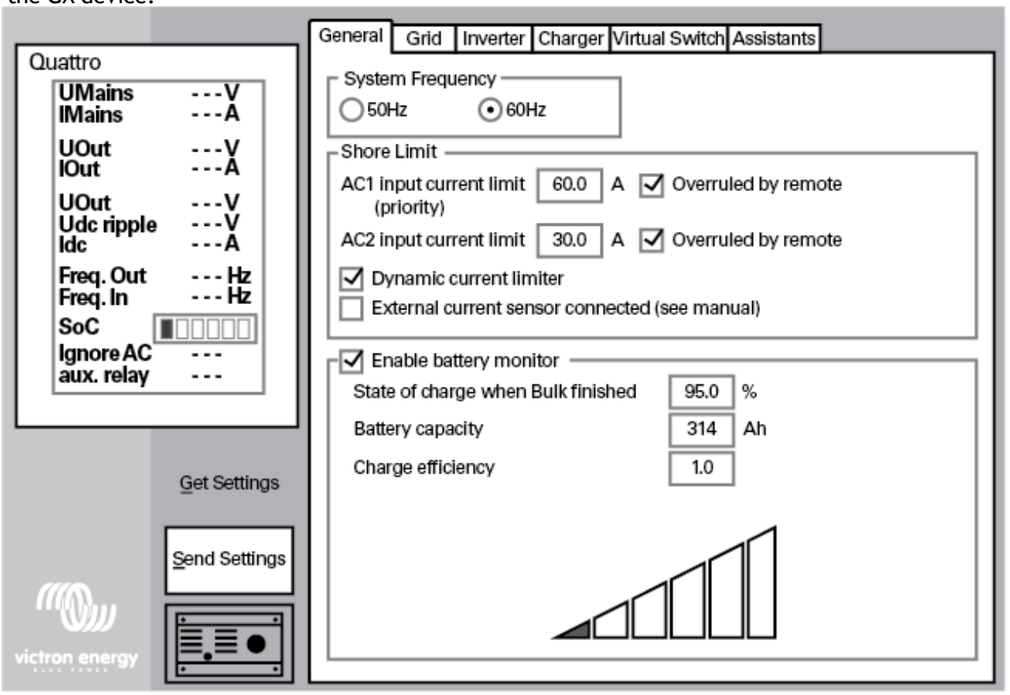

VE Configure 3 Software

Victron Inverter-Charger Open-loop Configuration Procedure

Refer to the latest Discover Battery documentation for battery values and the latest Victron documentation for details on menu navigation and the setup procedure.

1. Set the Discover Lithium batteries to ON and set the inverter to ON.
2. Connect your computer to the Victron GX device or inverter.
3. On the computer, start the VE Configure 3 software configuration tool.
•
4. Enable and disable parameter values according to the tables below.
5. Send the parameters to the Victron inverter-charger and GX device.
6. Toggle the On/Off/Charger Only switch to turn the inverter OFF and ON.

VE Configure 3 > General Tab

General Tab	Setting
[AC1] Overruled by remote (1)	Enable
[AC2] Overruled by remote (1)	Enable
Dynamic current limiter	Enable
External current sensor connected	Disable
Enable battery monitor	Enable
State of charge when Bulk finished (2)	95%
Battery capacity	Number of batteries x 314 Ah
Charge efficiency (2)	1.00

Enable is recommended.

(1) Precautionary settings ignored during normal operation and communication with Discover lithium batteries.

VE Configure 3 > Inverter Tab

Inverter Tab	Setting
DC input low shutdown (1)	48.0 V

Inverter Tab	Setting
DC input low restart (2)	52.0 V
DC input low pre-alarm (3)	49.5 V
Enable AES (4)	Disable

The lowest operating voltage allowed. Increase voltage as required.
(1) Restart voltage after DC input low shutdown. Recommend setting to the minimum value (minimum varies according to the DC Input low shutdown value).
(2) 49.5 V value (approximately 10% SOC) will trigger a low battery warning. Increase or

decrease as preferred.
(3) **Enable AES** has no relation to the AES series of batteries available from Discover. Refer to Victron manuals for information on the AES setting and function.

VE Configure 3 > Charger Tab

Charger Tab	Setting
Enable charger	Enable
Battery Type (1)	Blank
Lithium batteries (1)	Enable
Charge curve (1)	Select: Fixed
Absorption Voltage (1)	55.2 V
Float Voltage (1)	53.6 V

Charger Tab	Setting
Charge Current	Number of batteries x 200 A NOTE: Each Lithium Mobile battery is rated at a 200 A charge rate, but when connected in parallel, the maximum current is limited by internal busbars. For the recommended maximum current for paralleled Lithium Mobile, refer to the table in the Minimum Specifications for Battery Systems topic.
Repeated absorption time (1) (2)	1.0 < 3.0 Hr
Repeated absorption interval (1)	7.0 Days
Absorption time (1) (2)	1.0 < 3.0 Hr

Precautionary settings ignored during normal operation and communication with Discover lithium batteries.
(1) The recommended minimum is 1.0 hour. Multiple batteries may require a longer time to achieve a smooth completion of charge.

NOTE
Confirm the Float Voltage after installation of any Victron **Assistants**, and if necessary, set the Float Voltage back to 53.6 V.

NOTE
Depending on your system and particular use case, there may be other settings that require configuration. Refer to the inverter manual for information on these settings. For more information about configuring Victron devices, refer to product documentation on the Victron website (victronenergy.com) or the LYNK II Victron (Solar) User Manual (805-0040).